GLACERA

INSTALLATION INSTRUCTIONS

Split System Heat Pump & Air Conditioner

Model Size:
1.5, 2, 2.5, 3, 3.5, 4, 5 Tons
R-32

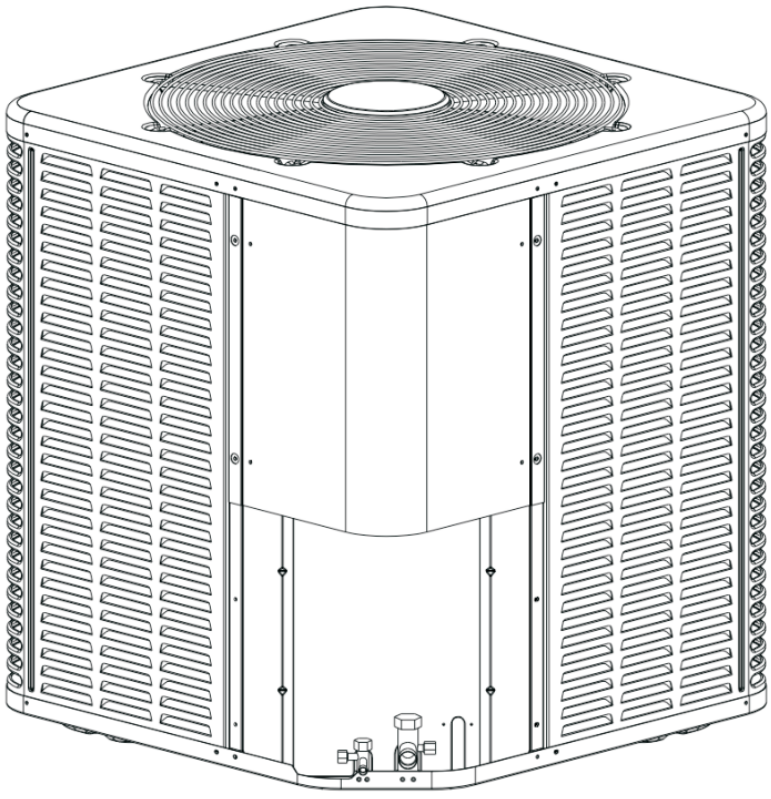

AHRI CERTIFIED®
www.ahridirectory.org
Unitary Small AC
AHRI Standard 210/240
Certification applies only When the complete system is listed with AHRI.

AHRI CERTIFIED®
www.ahridirectory.org
Unitary Small HP
AHRI Standard 210/240
Certification applies only When thecomplete system is listed with AHRI.

C ETL US LISTED
Intertek

CONTENTS

1. Symbol and Key to Safety Instructions 01
2. Considerations of Unit Location 12
3. Unit Installation Preparation 20
4. Unit Settings 20
5. Precautions for Refrigerant Pipeline 21
6. Refrigerant Pipeline Routing 23
7. Refrigerant Line Connection 25
8. Refrigerant Pipeline Brazing 26
9. Refrigerant Pipeline Leakage Inspection 28
10. Emptying 29
11. Service Valve 30
12. Electrical-Low Voltage 31
13. Electrical-High Voltage 33
14. Start 34
15. System Refrigerant Charging Regulation 35
16. System Operation and Troubleshooting 40
17. Wiring Diagram 45
18. Cleaning and Maintenance 48

1. Symbol and Key to Safety Instructions

1.1 Symbol Keywords

⚠	WARNING	The warnings in this document are identified by warning triangles printed on a gray background. The key words at the beginning of the warning indicate the type and severity of the next risk if no measures are taken to prevent it.

The following keywords are defined and used in this document:

▶	Danger	Indicates a dangerous situation, which, if not avoided, will lead to death or serious injury.
▶	Warning	Indicates a dangerous situation, which, if not avoided, may lead to death or serious injury.
▶	Caution	Indicates a dangerous situation, which, if not avoided, may cause mild to moderate injury.
▶	Note	Used to deal with behaviors unrelated to personal injury.

Important information

ℹ	This symbol represents important information that is not dangerous to people or property.

A2L R-32	**DANGER**	This symbol shows that this appliance uses a mild flammable refrigerant. If the refrigerant is leaked and exposed to an external ignition source, there is a risk of fire.
≥ A m²	**WARNING**	This symbol shows that the appliance shall be installed, operated and stored in a room with a floor area not less than the minimum room area.
	CAUTION	This symbol shows that the operation manual should be read carefully.
	CAUTION	This symbol shows that a service personnel should be handling this equipment with reference to the installation manual.
	CAUTION	This symbol shows that information is available such as the operating manual or installation manual.
① = lb oz kg ② = lb oz kg ①+② = lb oz kg ② ①	**CAUTION**	This symbol shows that when addition of charge is required by the manufacturer, record the resulting total refrigerant charge for each refrigerating system.

1.2 Safety

Please Read Before Continuing.

WARNING	▶ Failure to observe this warning may result in property damage, serious personal injury or death.
	▶ Before touching the electrical components, wait for 3 minutes after disconnecting the power supply.

NOTICE	▶ This document is the property of the customer and is kept by this unit. When you are finished, please return to the service informa tion package.
	▶ These instructions do not cover all changes in the system, nor do they provide all unexpected situations that may be encountered during installation.
	▶ If you need more information, or there are special problems that are not sufficient for the buyer, you should consult your installation dealer or local dealer.

Some benefits of installing an approved indoor and outdoor split system are maximum efficiency, best performance and best overall system reliability.

This document contains wiring diagram and maintenance information. This is the customer's property and belongs to this unit. When you are finished, please return to the service information package.

Warning:

- This appliance is not intended for use by persons (including children) with reduced physical, sensory or mental capabilities, or lack of experience and knowledge, unless they have been given supervision or instruction concerning use of the appliance by a person responsible for their safety.
- The appliance shall be installed in accordance with national wiring regulations
- Before accessing the connection terminals, all power circuits must be disconnected.
- This information is intended for use by individuals with sufficient electrical and mechanical experience background. Attempting to repair central air conditioning products may result in personal injury and/or property damage.

Warning: Dangerous voltage

- Failure to observe this warning may result in property damage, serious personal injury or death.
- Disconnect all power before maintenance, including remote disconnection. Follow proper locking/tagging procedures to ensure that the power supply will not be energized accidentally.

Warning: Refrigerant oil

● Attempting to repair central air-conditioning products may result in property damage, serious personal injury or death. These units use R-32 refrigerant, These devices use R-32 refrigerant, with a safety level of A2L.Use only the service equipment approved by R-32. The refrigerant cylinder is painted "ashen" to indicate the type of refrigerant, and may contain a "dip" tube to allow liquid refrigerant to be filled into the system. All R-32 systems use POE oil , which can easily absorb moisture from he atmosphere. In order to limit this "moisture absorption" effect, the system should be sealed as much as possible. If the system is exposed to the atmosphere for more than 4 hours, the compressor oil must be changed. Do not destroy the vacuum with air, and always replace the dryer when you open the system for component replacement.

Warning: Hot surface

● May cause mild to severe burns. Failure to observe this caution may result in property damage or personal injury. Do not touch the top of the compressor.

Caution: Contains refrigerant

● Failure to follow the correct procedures will lead to personal illness or injury or serious equip ment damage. The system contains high-pressure oil and refrigerant. Before opening the system, recover the refrigerant to release the pressure.

Note: Indoor unit is required

● Indoor unit is equipped with piston or TXV, and the model of piston and TXV is selected by manufacture, please do not change by yourself.

Note: Grounding is required

● Failure to check or use the correct maintenance tools may result in equipment damage or personal injury. Reconnect all grounding devices. All parts of this product that can conduct current are grounded. If the grounding wire, screw, strap, clip, nut or washer used to com plete the grounding path is removed during maintenance, it must be put back in place and properly fixed.

Warning: service valve

● Failure to observe this warning will result in sudden discharge of system charge, which may result in personal injury and/or property damage. When opening the liquid pipeline service valve, be extra careful. Turn the valve stem counterclockwise until the valve stem touches the bead.

Warning: Brazing is required

● Failure to check the wiring or use the correct maintenance tools may result in equipment damage or personal injury. If using existing refrigerant lines, make sure that all joints are brazed, not soldered.

Warning: High current leakage

● Failure to observe this warning may result in property damage, serious personal injury or death. Before connecting the power supply, grounding is essential.

Warning:

● This product may expose you to chemicals including lead and lead components, which are known to cause cancer, birth defects or other reproductive harm in California. For more information, please visit www.P65Warnings.ca.gov.

Warning:Rist of fire

● Mild flammable refrigerant used.
Follow handling instructions carefully in compliance with national regulations.

Warning:Fire, explosion

● Store in a well ventilated room without continuously operating flames or other potential ignition.

Warning:

● Risk of electric shock. Can cause injury or death. Disconnect all remote electric power supplies before servicing.

● Risk of fire mild. Flammable refrigerant used. To be repaired only by trained service personnel. Do not puncture refrigerant tubing.

● Risk of fire. Dispose of properly in accordance with federal or local regulations.

● Risk of fire. Consult repair manual/owner's guide before attempting to service this product. All safety precautions must be followed.

● Risk of fire – auxiliary devices which may be ignition sources shall not be installed in the ductwork, other than auxiliary devices listed for use with the specific appliance. See instructions.

Warning:

● Do not use means to accelerate the defrosting process or to clean, other than those recommended by the manufacturer.

● The appliance shall be stored in a room that does not have continuously operating \ ignition sources (for example: open flames, an operating gas appliance or an operating electric heater).

● Do not pierce/puncture refrigerant lines or burn the unit.

● Be aware that refrigerants may not contain an odor.

Warning:

- This appliance is not intended for use by persons (including children) with reduced physical, sensory or mental capabilities, or persons who lack experience and knowledge, unless they are supervised or have been given instructions concerning the use of the appliance by a person responsible for their safety.
- Children should be supervised to ensure that they do not play with the appliance.
- Any person who is involved with working on or opening a refrigerant circuit should hold a current valid certificate from an industry-accredited assessment authority, which authorizes their competence to handle refrigerants safely in accordance with an industry recognized assessment credential.
- Servicing shall only be performed as recommended by the equipment manufacturer.
- Maintenance and repair requiring the assistance of other skilled personnel shall be carried out under the supervision of a person competent in the use of flammable refrigerants.
- Prior to beginning work on systems containing flammable refrigerants, safety checks are necessary to minimize the risk of ignition.

Warning:

- When repairing the refrigerating system, comply with the following precautions prior to conducting work on the system:
  - shall be undertaken according to controlled procedures so as to minimize the risk of the presence of flammable gases or vapors while the work is being performed.
  - All maintenance staff and others working in the local area shall be instructed on the nature of work being carried out. Work in confined spaces shall be avoided.
  - The area shall be checked with an appropriate refrigerant detector prior to and during work, to ensure the technician is aware of potentially toxic or flammable environment.
- Ensure that the leak detection equipment being used is suitable for use with all applicable refrigerants, i.e. non-sparking, adequately sealed or intrinsically safe.
  - If any brazing/welding is to be conducted on the refrigerating equipment or any associated parts, appropriate fire extinguishing equipment shall be available and easily accessible. Have a dry powder or CO2 fire extinguisher adjacent to the charging area.
  - When carrying out work in relation to a refrigerating system that involves exposing any pipe work, no sources of ignition shall be used in such a manner t hat it may lead to the risk of fire or explosion.
- All possible ignition sources, including cigarette smoking, should be kept sufficiently far away from the site of installation, repair, or removal and disposal of the unit, during which refrigerant can possibly be released into the surrounding space. Prior to beginning work, the area around the equipment is to be surveyed to make sure that there are no flammable hazards or ignition risks. “No Smoking” signs shall be clearly displayed.
- Ensure that the area is in the open or that it is adequately ventilated before opening the system or conducting any hot work. A degree of ventilation shall continue during the period that the work is carried out. The ventilation should safely disperse any released refrigerant and preferably expel it externally into the surroundings.
- Where electrical components are being changed, they shall be fit according to their purpose and to the correct specification. At all times the manufacturer’s maintenance and service guidelines shall be followed. If in doubt, consult the manufacturer’s technical department for assistance. The following checks shall be applied to installations using flammable refrigerants:

- The actual refrigerant charge is in accordance with the room size within which the refrigerant containing parts are installed.
- The ventilation machinery and outlets are operating adequately and are not obstructed.
- If an indirect refrigerating circuit is being used, the secondary circuit shall be checked for the presence of refrigerant.
- Equipment marking must remain visible andlegible. Markings and signs that are illegible shall be corrected.

● Refrigerating pipe or components are installed in a position where they are unlikely to be exposed to any substances which may corrode refrigerant containing components, unless the components are constructed of materials that are inherently resistant to corrosion or are suitably protected against corrosion.

● Repair and maintenance of electrical components shall include initial safety checks and component inspection procedures.If a fault exists that could compromise safety, then no electrical supply shall be connected to the circuit until the fault has been dealt with satisfactorily.

● If the fault cannot be corrected immediately but it is necessary to continue operation, an adequate temporary solution shall be used. This shall be reported to the owner of the equipment so that all parties are advised. Initial safety checks shall include:

- That capacitors are discharged: this shall be done in a safe manner to avoid the possibility of sparking.
- That no live electrical components and wiring are exposed while charging, recovering or purging the system.
- That there is continuity of proper grounding.

Warning:

● Sealed electrical components shall be replaced.

● Intrinsically safe components must be replaced.

● Check that cabling will not be subject to wear, corrosion, excessive pressure, vibration, sharp edges or any other adverse environmental effects. The check shall also take into account the effects of aging or continual vibration from sources such as compressors or fans.

● Under no circumstances shall potential sources of ignition be used while searching for or detection of refrigerant leaks. A halide torch (or any other detector using a naked flame) shall not be used.

● Electronic leak detectors may be used to detect refrigerant leaks but, in the case of flammable refrigerants, the sensitivity may not be adequate, or may need re-calibration. (Detection equipment shall be calibrated in a refrigerant-free area.) Ensure that the detector is not a potential source of ignition and is suitable for the refrigerant used. Leak detection equipment shall be set at a percentage of the LFL of the refrigerant and shall be calibrated for the refrigerant employed, and the appropriate percentage of gas (25 % maximum) is confirmed.

● If a leak is suspected, all naked flames shall be removed/extinguished.

● If a leakage of refrigerant which requires brazing is found, all of the refrigerant shall be recovered from the system, or isolated(by means of shut off valves) in a part of the system remote from the leak.

- Leak detection fluids are also suitable for use with most refrigerants but the use of detergents containing chlorine shall be avoided as the chlorine may react with the refrigerant and corrode the copper pipe-work.
- NOTE:Examples of leak detection fluids are -bubble method.
- When breaking into the refrigerant circuit to make repairs - or for any other purpose -conventional procedures shall be used. However, for flammable refrigerants it is important that best practices be followed, since flammability is a consideration. The following procedure shall be adhered to:\
  - safely remove refrigerant following local and national regulations.
  - evacuate.
  - purge the circuit with inert gas.
  - evacuate.
  - continuously flush or purge with inert gas when using flame to open circuit; and.
  - open the circuit.
- The refrigerant charge shall be recovered into the correct recovery cylinders if venting is not allowed by local and national codes. For appliances containing flammable refrigerants, the system shall be purged with oxygen-free nitrogen to render the appliance safe for flammable refrigerants. This process might need to be repeated several times. Compressed air or oxygen shall not be used for purging refrigerant systems.
- For appliances containing flammable refrigerants,refrigerants purging shall be achieved by breaking the vacuum in the system with oxygen-free nitrogen and continuing to fill until the working pressure is achieved, then venting to atmosphere, and finally pulling down to a vacuum. This process shall be repeated until no refrigerant is within the system .When the final oxygen-free nitrogen charge is used, the system shall be vented down to atmospheric pressure to enable work to take place.
- The outlet for the vacuum pump shall not be close to any potential ignition sources, and ventilation shall be available.
- Ensure that contamination of different refrigerants does not occur when using charging equipment. Hoses or lines shall be as short as possible to minimise the amount of refrigerant they contain.
- When use a refrigerant tank with siphon to add refrigerant, the refrigerant tank should be placed upright. When use a refrigerant tank without siphon to add refrigerant, the refrigerant tank should be placed upside down. Ensure that the refrigeration system is grounded prior to charging the system with refrigerant.
- I n general, R-32 doesn't have a siphon tube or dip tube into tank. For this situation, they must be charged in liquid form to prevent fractionation of the blended refrigerant and that requires the jug to be inverted during charging.
- Label the system when charging is complete (if it is not already labeled).
- Take extreme care not to overfill the refrigeration system.
- Prior to recharging the system, it shall be pressure-tested with the appropriate purging gas. The system shall be leak-tested on completion of charging but prior to commissioning. A follow up leak test shall be carried out prior to leaving the site.
- Before carrying out this procedure, it is essential that the technician is completely familiar with the equipment and all its detail. It is recommended that all refrigerants are recovered safely. Prior to the task being carried out, an oil and refrigerant sample shall be taken in case analysis is required prior to re-use of reclaimed refrigerant. It is essential that electrical power is available before the task is commenced.

a) Become familiar with the equipment and its operation.
b) Isolate system electrically.
c) Before attempting the procedure ensure that:
– mechanical handling equipment is available, if required, for handling refrigerant cylinders;
– all personal protective equipment is available and being used correctly;
– the recovery process is supervised at all times by a competent person;
– recovery equipment and cylinders conform to the appropriate standards.
d) Pump down refrigerant system, if possible.
e) If a vacuum is not possible, make a manifold so that refrigerant can be removed from various parts of the system.
f) Make sure that the cylinder is situated on the scales before recovery takes place.
g) Start the recovery machine and operate it in accordance with the manufacturer's instructions.
h) Do not overfill cylinders. (No more than 80% volume liquid charge).
i) Do not exceed the maximum working pressure of the cylinder, even temporarily.
j) When the cylinders have been filled correctly and the process has been completed, make sure that the cylinders and the equipment are removed from site promptly and all isolation valves on the equipment are closed off.
k) Recovered refrigerant shall not be charged into another refrigeration system unless it has been cleaned and checked.

- Equipment shall be labeled stating that it has been de-commissioned and emptied of refrigerant. The label shall be dated and signed. Ensure that there are labels on the equipment stating the equipment contains flammable refrigerant.
- When removing refrigerant from a system, either for servicing or decommissioning, it isrecommended that all refrigerants are removed safely.
- When transferring refrigerant into cylinders, ensure that only appropriate refrigerant recovery cylinders are employed. Ensure that the correct number of cylinders for holding the total system charge is available. All cylinders to be used are designated for the recovered refrigerant and labelled for that refrigerant (i.e.special cylinders for the recovery of refrigerant). Cylinders shall be complete with pressure-relief valve and associated shut-off valves in good working order. Empty recovery cylinders are evacuated and, if possible, cooled before recovery occurs.
- The recovery equipment shall be in good working order with a set of instructions concerning the equipment that is at hand and shall be suitable for the recovery of the flammable refrigerant. If in doubt,the the manufacturer should be consulted. In addition, a set of calibrated weighing scales shall be available and in good working order. Hoses shall be complete with leak-free disconnect couplings and in good condition.
- The recovered refrigerant shall be processed according to local legislation in the correct recovery cylinder, and the relevant waste transfer note arranged. Do not mix refrigerants in recovery units and especially not in cylinders.
- If compressors or compressor oils are to be removed, ensure that they have been evacuated to an acceptable level to make certain that flammable refrigerant does not remain within the lubricant. The compressor body shall not be heated by an open flame or other ignition sources to accelerate this process. When oil is drained from a system, it shall be carried out safely
- Do not use the air conditioner for other purposes.
- In order to avoid any quality deterioration, do not use the unit for the cooling of precision instruments, food, plants, animals or works of art.
- Before cleaning, be sure to stop the operation, turn the breaker off or unplug the supply cord. Otherwise, electric shock and injury may occur.

- In order to avoid electric shock or fire, make sure that an earth ground detector is installed.
- Never touch the air outlet or the horizontal blades while the swing flap is in operation.Your fingers may become caught or the unit may break down.
- Never put any objects into the air inlet or outlet.
- Objects touching the fan at high speed can be dangerous.
- Never inspect or service the unit by yourself.
- Ask a qualified service person to perform this task.
- Do not dispose of this product as unsorted municipal waste. This waste should be collected separately for special treatment.
- Do not dispose of electrical appliances as unsorted municipal waste. Use separate collection facilities. Contact your local government for information regarding the connection systems available.
- If electrical appliances are disposed of in landfills or dumps, hazardous substances can leak into the groundwater and get into the food chain, harming your health and well-being.
- To prevent refrigerant leak, contact your dealer.
- When the system is installed and operates in a small room, it is required to maintain the concentration of the refrigerant below the limit, in case a leak occurs. Otherwise, oxygen in the room may be affected, resulting in a serious accident.
- The refrigerant in the air conditioner is safe and normally does not leak.
- If the refrigerant leaks into the room and comes into contact with the fire of a burner, a heater or a cooker, a harmful gas could be released.
- Turn off any combustible heating devices, ventilate the room, and contact the dealer where you purchased the unit.
- Do not use the air conditioner until a service person confirms that the refrigerant leak is repaired.
- Keep any required ventilation openings clear of obstruction.

Warning:

- That pipe -work including piping material, pipe routing, and installation shallinclude protection from physical damage in operation and service, and be in compliance with national and local codes and standards.
- That after completion of field piping for split systems, the field pipeworkshall be pressure tested with an inert gas and then vacuum tested prior torefrigerant charging,according to the following requirements.
- The minimum test pressure for the low side of the system shall be the low side designpressure and the minimum test pressure for the high side of the system shall be the highside design pressure, unless the high side of the system, cannot be isolated from the lowside of the system in which case the entire system shall be pressure tested to the low sidedesign pressure.
- Ducts connected to an appliance shall not contain a potential ignition source.
- Precautions shall be taken to avoid excessive vibration or pulsation to refrigerating piping .
- The protection devices, piping and fittings shall be protected as far as possibleagainst adverse environmental effects, for example the danger of water collecting andfreezing in relief pipes or the accumulation of dirt and debris.
- Piping in refrigerating systems shall be so designed and installed as tominimize the likelihood of hydraulic shock damaging the system.
- The solenoid valves shall be correctly positioned in the piping to avoid hydraulicshock and shall not block in liquid refrigerant unless adequate relief is provided.
- Steel pipes and components shall be protected against corrosion with a rustproof coating before applying any insulation.

Caution:

- Be sure the air conditioner is grounded. In order to avoid electric shock, make sure that the unit is grounded and that the ground wire is not connected to a gas or water pipe, lightning conductor or telephone ground wire.
- Do not operate the air conditioner with a wet hands. An electric shock may happen.
- Do not operate the air conditioner when using a room fumigation-type insecticide. Failure to observe this precaution could cause the chemicals to become deposited in the unit, which could endanger the health of those who are hypersensitive to chemicals. It may also cause the refrigerant sensor to alarm.
- To avoid oxygen deficiency, ventilate the room sufficiently if equipment with a burner is used together with the air conditioner.
- Arrange the drain hose to ensure smooth drainage. Incomplete drainage may cause damage to the building, furniture, etc.
- Never touch the internal parts of the controller. Do not remove the front panel. Some parts inside are dangerous to touch, and machine troubles may occur.
- Attention is drawn to the fact that additional transportation regulations may exist with respect to equipment containing flammable gas. The maximum number of pieces of equipment or the configuration of the equipment permitted to be transported together will be determined by the applicable transport regulations.
- Signs for similar appliances used in a work area are generally addressed by local regulations and give the minimum requirements for the provision of safety and/or health signs for a work location.
- Storage package protection should be constructed such a way that mechanical damage to the equipment inside the package will not cause a leak of the REFRIGERANT CHARGE.
- The maximum number of pieces of equipment permitted to be stored together will be determined by local regulations.
- All required signs are to be maintained and employers should ensure that employees receive suitable and sufficient instruction and training on the meaning of appropriate safety signs and the actions that need to be taken in connection with these signs.
- The effectiveness of signs should not be diminished by too many signs being placed together.
- Any pictograms used should be as simple as possible and contain only essential details.
- The storage of the appliance should be in accordance with the applicable regulations or instructions, whichever is more stringent.
- Do not operate the air conditioner when using a room fumigation - type insecticide. Failure to observe this precaution could cause the chemicals to become deposited in the unit, which could endanger the health of those who are hypersensitive to chemicals.
- Do not place appliances which produce open flame in places exposed to the air flow from the unit or under the indoor unit. It may cause incomplete combustion or deformation of the unit due to the heat.
- Do not install the air conditioner in a location where flammable gas may leak out. If the gas leaks out and stays around the air conditioner, a fire may break out.

Warning:

The appliance uses R-32 refrigerant.

Warning:

- This outdoor unit must combine the indoor unit with a refrigerant leak detection device.
- These instructions are exclusively intended for qualified contractors and authorized installers.
- Work on the refrigerant circuit with mild flammable refrigerant in safety group A2L may only be carried out by authorized heating contractors. These heating contractors must be trained in accordance with UL 60335-2-40, Section HH. The certificate of competence from an industry accredited body is required.
- Work on electrical equipment may only be carried out by a qualified electrician.
- Before initial commissioning, all safety – related points must be checked by the particular certified heating contractors. The system must be commissioned by the system installer or a qualified person authorized by the installer.

2. Considerations of Unit Location

2.1 Unit Size

Table 2.1

Unit size	
Model	H x W x L (inches)
18K/24K/30K	25 x 23-3/5 x 23-3/5
36K	25 x 29-1/7 x 29-1/7
42K/48K/60K	32-7/8 x 29-1/7 x 29-1/7

The weight of the unit is attached to the carton.

When installing the outdoor unit on the roof, make sure that the roof can support the weight of the outdoor unit. It is recommended to choose appropriate isolation to prevent sound or vibration from being transmitted to the building structure.

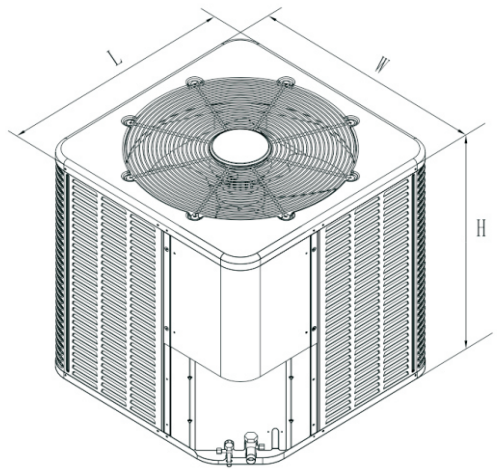

Figure 2.1

2.2 Refrigerant Pipeline Restriction

Table 2.2

Refrigerant Piping		Capacity (Kbtu/h)						
		18K	24K	30K	36K	42K	48K	60K
Liquid-Gas	In.	3/8-3/4	3/8-3/4	3/8-3/4	3/8-3/4	3/8-3/4	3/8-7/8	3/8-7/8
Max.Refrigerant Line Length*	Ft.	100			150			
Max.Elevation Vertical Lift**	Ft.	32			65			

* It is recommended to adopt standard pipeline size; Refrigerant charge: see Section 14.

- Maximum equivalent length of pipeline = 150 feet.
- Maximum vertical equivalent length = 65 feet.
- Use only the pipe diameters shown in Table 2.2.
- If the suction line exceeds 65 feet, do not use a larger suction line than recommended.

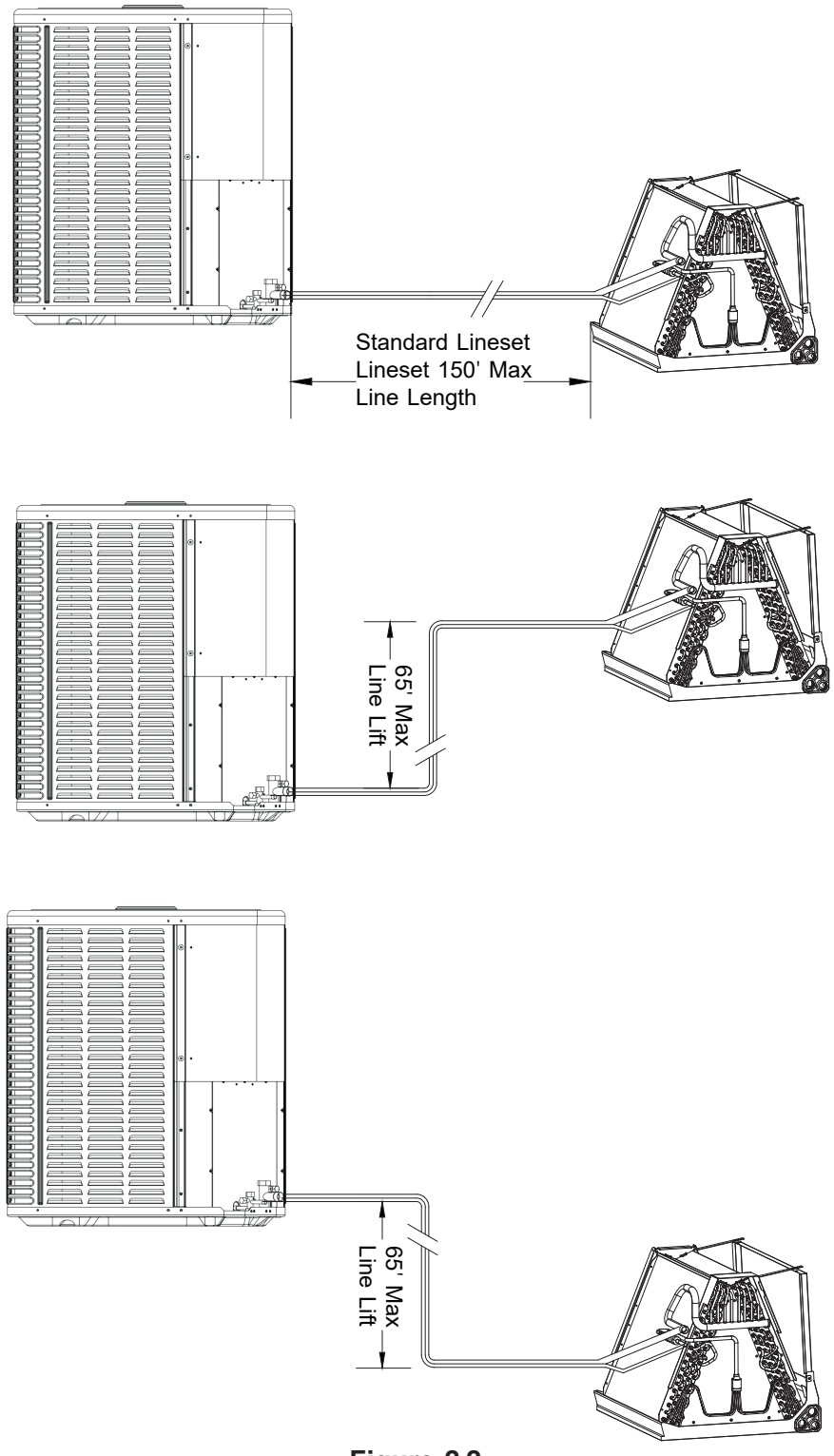

Figure 2.2

2.3 Position Restriction

- Make sure that the discharge area at least 60 inches above the top of the unit is unrestricted.
- Don't put the outdoor unit near the bedroom, because the normal operating sound may be offensive.
- Position the equipment, leaving enough space for smooth airflow, wiring, refrigerant lines and maintainability.
- 12 inches minimum is allowed. The clearance from one side of the access panel to the wall should be at least 24 inches. Next to the control panel near the panel.
- Keep a distance of 24 inches between adjacent units.
- Place the unit in a place where water, snow or ice cannot fall directly on the device from the roof or overhangs.
- See figures 2.3 and 2.4.

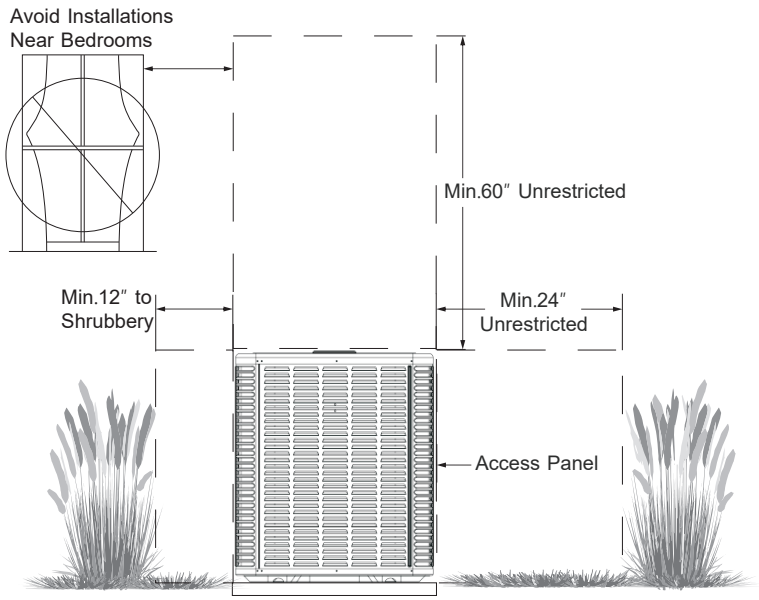

Figure 2.3

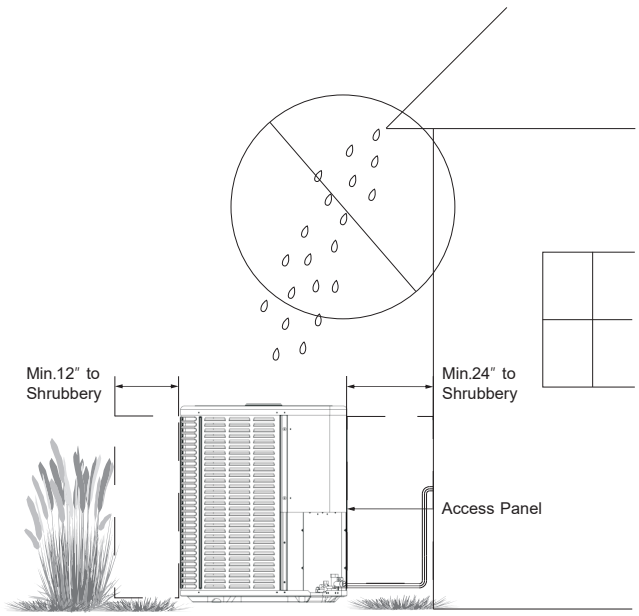

Figure 2.4

Precautions in cold climate (heat pump only)

Precautions must be taken for units installed in areas with snow and long-term temperatures below freezing point.

- Depending on the local weather conditions, the unit should be raised by 3-12 inches. This extra height will allow the snow and ice melted during the defrosting cycle to be discharged before re-freezing. Make sure that the drain hole on the unit chassis is not blocked, otherwise it will hinder the defrosting water discharge (Figure 2.5).
- If possible, avoid places that are prone to snow. If this is not feasible, a snow barrier should be installed around the unit to prevent snow accumulation on the side of the unit.

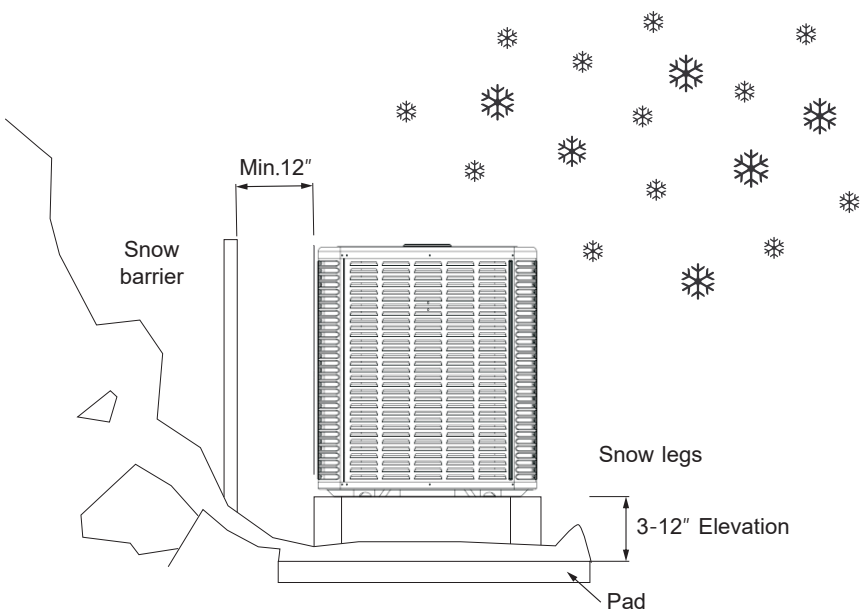

Figure 2.5

Corrosive Environment

Exposure to corrosive environment may shorten the service life of unit, corrode metal parts and/or negatively affect the performance of unit. Corrosive elements include but are not limited to: sodium chloride, sodium hydroxide, sodium sulfate and other compounds commonly found in seawater, sulfur, chlorine, fluorine, fertilizers and various chemical pollutants from industrial/manufacturing plants. If it is installed in an area that may be exposed to corrosive environment, special attention should be paid to the placement and maintenance of the unit.

- Lawn sprinklers/hoses/waste water should not be sprayed directly on the outer panel of the unit for a long time.
- In coastal areas: install the unit on the side away from the waterfront.
- Fences or shrubs can provide some shielding protection for the unit, but the minimum device clearance must still be kept.
- Clean the outdoor coil and any exposed external surfaces about every three months.

2.4 Refrigerant Charge and Room Area Limitations

● In UL/CSA 60335-2-40, R-32 refrigerant is classified as class A2L, which is mildly flammable. Therefore, R-32 refrigerant will limit the area of the rooms being served by the system. Similarly, the total amount of refrigerant in the system shall be less than or equal to the allowable maximum refrigerant charge. The allowable maximum refrigerant charge depends on the area of the rooms being served by the system.

NOTE

The abbreviations in this section are explained as follows:
Mc: The actual refrigerant charge in the system.
A: the actual room area where the appliance is installed.
Amin: The required minimum room area.
Mmax:The allowable maximum refrigerant charge in a room.
Qmin : The minimum circulation airflow.
Anvmin:The minimum opening area for connected rooms.
TAmin:The required minimum total area of the conditioned space (For appliances serving two or more rooms with an air duct system).
TA:The total area of the conditioned space connected by air ducts. For appliances serving two or more rooms with an air duct system.

2.4.1 The room area calculation requirements

CAUTION

The space considered shall be any space which contains refrigerant-containing parts or into which refrigerant could be released.
The room area (A) of the smallest, enclosed, occupied space shall be used in the determination of the refrigerant quantity limits.

● For determination of room area (A) when used to calculate the refrigerant charge limit, the following shall apply.
The room area (A) shall be defined as the room area enclosed by the projection to the base of the walls, partitions and doors of the space in which the appliance is installed. Spaces connected by only drop ceilings, ductwork, or similar connections shall not be considered a single space.

● Units mounted higher than 70-55/64 inches and spaces divided by partition walls that are no higher than 62-63/64 inches shall be considered a single space.

● Rooms on the same floor and connected by an open passageway between the spaces can be considered a single room when determining compliance to Amin, if the passageway complies with all of the following.
1) It is a permanent opening.
2) It extends to the floor.
3) It is intended for people to walk through.

● The area of the connected rooms, on the same floor,connected by permanent opening in the walls and/or doors between occupied spaces, including gaps between the wall and the floor, can be considered a single room when determining compliance to Amin, provided all of the following conditions are met as Figure 2.6.
1) Low level opening
①The opening shall not be less than Anvmin in Table 2.5.
②The area of any openings above 11-13/16 inches from the floor shall not be considered in determining compliance with Anvmin.
③At least 50% of the opening area of Anvmin shall be below 7-7/8 inches from the floor.
④The bottom of the opening is not more than 3-15/16 inches from the floor.
⑤The opening is a permanent opening that cannot be closed.
⑥For openings extending to the floor the height shall not be less than 25/32 inches above the surface of the floor covering.

2) High level opening

①The opening shall not be less than 50% of Anvmin in Table 2.3.

②The opening is a permanent opening that cannot be closed.

③The opening shall be at least 59 inches above the floor.

④The height of the opening is not less than 25/32 inches.

3) Room size requirement

①The room into which refrigerant can leak, plus the connected adjacent room(s) shall have a total area not less than Amin. Amin is shown in Table 2.5.

②The room area in which the unit is installed shall be not less than 20% Amin. Amin is shown in Table 2.5.

NOTE

The requirement for the second opening can be met by drop ceilings, ventilation ducts, or similar arrangements that provide an airflow path between the connected rooms.

● The minimum opening for natural ventilation (Anvmin) in connected rooms is related to the room area (A), the actual refrigerant charge of refrigerant in the system (Mc), and the allowable MAXIMUM REFRIGERANT CHARGE in the system (Mmax), Anvmin can be determined according to Table 2.3.

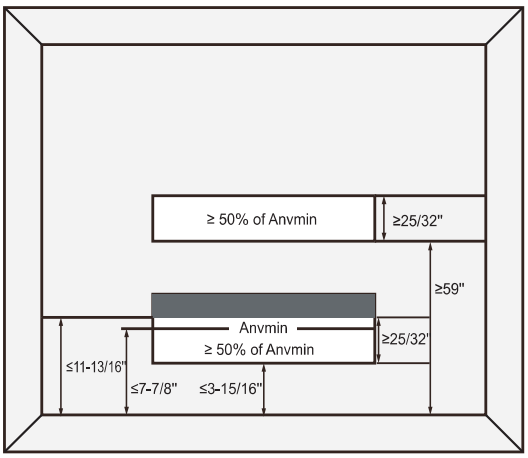

Figure 2.6 Opening conditions for connected rooms

The minimum opening area for connected rooms

A		Mc		Mmax		Anvmin	
ft^2	m^2	lb-oz	kg	lb-oz	kg	ft^2	m^2
100	11	17-3	7.8	6-10	3.0	1.3	0.14
110	12	17-3	7.8	7-5	3.3	1.2	0.13
120	13	17-3	7.8	8-0	3.6	1.1	0.12
130	14	17-3	7.8	8-10	3.9	1.0	0.11
140	16	17-3	7.8	9-5	4.2	1.0	0.11
150	17	17-3	7.8	10-0	4.5	0.9	0.10
160	18	17-3	7.8	10-10	4.8	0.8	0.09
170	19	17-3	7.8	11-5	5.1	0.7	0.08
180	20	17-3	7.8	12-0	5.4	0.6	0.07
190	21	17-3	7.8	12-10	5.7	0.5	0.06
200	22	17-3	7.8	13-5	6.0	0.5	0.06
210	23	17-3	7.8	14-0	6.4	0.4	0.04
220	24	17-3	7.8	14-10	6.6	0.3	0.03
230	26	17-3	7.8	15-5	6.9	0.2	0.02
240	27	17-3	7.8	16-0	7.3	0.1	0.01
250	28	17-3	7.8	16-10	7.5	0.1	0.01
260	29	17-3	7.8	17-5	7.9	0.0	0.00

Table 2.3

Note: Take the Mc=17 lb 3 oz as an example.

● For appliances serving two or more rooms with an air duct system, The room area calculation shall be determined based on the total area of the conditioned space (TA) connected by ducts taking into consideration that the circulating airflow distributed to all the rooms by the appliance integral indoor fan will mix and dilute the leaking refrigerant before entering any room.

2.5.2 The allowed maximum refrigerant charge and required minimum room area

● If the fan incorporated to an appliance is continuously operated or operation is initiated by a REFRIGERANT DETECTION SYSTEM with a sufficient CIRCULATION AIRFLOW rate, the allowable maximum refrigerant charge (Mmax) and the required minimum room area (Amin/TAmin) is shown in Table 2.4 and Table 2.5.

The allowable maximum refrigerant charge

A/TA		Mmax		A/TA		Mmax	
ft²	m²	lb-oz	kg	ft²	m²	lb-oz	kg
30	2.70	2-0	0.9	150	13.5	10-0	4.6
40	3.60	2-10	1.2	160	14.4	10-9	4.9
50	4.50	3-5	1.5	170	15.3	11-4	5.2
60	5.40	3-15	1.8	180	16.2	11-15	5.5
70	6.30	4-9	2.1	190	17.1	12-9	5.8
80	7.20	5-4	2.4	200	18.0	13-4	6.1
90	8.10	5-15	2.7	210	18.9	14-1	6.4
100	9.00	6-9	3.0	220	19.8	14-12	6.7
110	9.90	7-5	3.3	230	20.7	15-6	7.0
120	10.80	7-15	3.6	240	21.6	16-0	7.3
130	11.70	8-9	4.0	250	22.5	16-12	7.6
140	12.60	9-4	4.3	260	23.4	17-13	7.9

Table 2.4

The required minimum room area

Mc		Amin/TAmin		Mc		Amin/TAmin	
lb-oz	kg	ft²	m²	lb-oz	kg	ft²	m²
2-2	1.0	33.1	3.1	10-2	4.6	152.1	14.1
2-9	1.2	39.7	3.7	10-9	4.8	158.7	14.7
3-0	1.4	46.3	4.3	11-0	5.0	165.3	15.4
3-7	1.6	52.9	4.9	11-7	5.2	171.9	16.0
3-15	1.8	59.5	5.5	11-14	5.4	178.5	16.6
4-6	2.0	66.1	6.1	12 -5	5.6	185.1	17.2
4-13	2.2	72.7	6.8	12-12	5.8	191.7	17.8
5-4	2.4	79.3	7.4	13-3	6.0	198.4	18.4
5-11	2.6	86.0	8.0	13-10	6.2	205.0	19.0
6-2	2.8	92.6	8.6	14-1	6.4	211.6	19.7
6-9	3.0	99.2	9.2	14-8	6.6	218.2	20.3
7-0	3.2	105.8	9.8	14-15	6.8	224.8	20.9
7-7	3.4	112.4	10.4	15-6	7.0	231.4	21.5
7-15	3.6	119.0	11.1	15-14	7.2	238.0	22.1
8-6	3.8	125.6	11.7	16-5	7.4	244.6	22.7
8-13	4.0	132.2	12.3	16-12	7.6	251.2	23.3
9-4	4.2	138.8	12.9	17-3	7.8	257.9	24.0
9-11	4.4	145.5	13.5				

Table 2.5

The minimum circulation airflow

Mc		Qmin		Mc		Qmin	
lb-oz	kg	CFM	m³/h	lb-oz	kg	CFM	m³/h
2-2	1.0	59	100	10-2	4.6	275	467
2-9	1.2	71	121	10-9	4.8	287	488
3-0	1.4	83	141	11-0	5.0	298	506
3-7	1.6	95	161	11-7	5.2	310	527
3-15	1.8	107	182	11-14	5.4	322	547
4-6	2.0	119	202	12 -5	5.6	334	567
4-13	2.2	131	223	12-12	5.8	346	588
5-4	2.4	143	243	13-3	6.0	358	608
5-11	2.6	155	263	13-10	6.2	370	629
6-2	2.8	167	284	14-1	6.4	382	649
6-9	3.0	179	304	14-8	6.6	394	669
7-0	3.2	191	325	14-15	6.8	406	690
7-7	3.4	203	345	15-6	7.0	418	710
7-15	3.6	215	365	15-14	7.2	430	731
8-6	3.8	227	386	16-5	7.4	442	751
8-13	4.0	239	406	16-12	7.6	454	771
9-4	4.2	251	426	17-3	7.8	466	792
9-11	4.4	263	447				

Table 2.6

If the installation height cannot exceed 2000m,the required minimum room area follow as Table 2-7.

	Altitude(m)							
	201-400	401-600	601-800	801-1000	1001-1200	1201-1400	1401-1600	above 1600
Charge lb	Minimum Conditioned Space(m²)							
2	2.7	2.7	2.7	2.8	2.9	3.0	3.0	3.1
3	4.0	4.0	4.1	4.2	4.3	4.4	4.5	4.6
4	5.4	5.4	5.5	5.6	5.7	5.9	6.0	6.2
5	6.7	6.7	6.9	7.1	7.2	7.4	7.5	7.7
6	8.1	8.1	8.2	8.5	8.6	8.9	9.0	9.3
7	9.4	9.4	9.6	9.9	10.1	10.3	10.5	10.8
8	10.7	10.7	11.0	11.3	11.5	11.8	12.0	12.4
9	12.1	12.1	12.3	12.7	12.9	13.3	13.5	13.9
10	13.4	13.4	13.7	14.1	14.4	14.8	15.0	15.4
11	14.8	14.8	15.1	15.5	15.8	16.3	16.5	17.0
12	16.1	16.1	16.4	16.9	17.2	17.7	18.1	18.5
13	17.5	17.5	17.8	18.3	18.7	19.2	19.6	20.1
14	18.8	18.8	19.2	19.7	20.1	20.7	21.1	21.6
15	20.1	20.1	20.6	21.2	21.6	22.2	22.6	23.2
16	21.5	21.5	21.9	22.6	23.0	23.6	24.1	24.7
17	22.8	22.8	23.3	24.0	24.4	25.1	25.6	26.3
18	24.2	24.2	24.7	25.4	25.9	26.6	27.1	27.8
19	25.5	25.5	26.0	26.8	27.3	28.1	28.6	29.3
20	26.9	26.9	27.4	28.2	28.7	29.5	30.1	30.9

Table 2.7

CAUTION

The allowable maximum refrigerant charge of the Table 2.4 or the required minimum room area of the Table 2.5 is available only if the following conditions are met:
Minimum velocity of 3.28ft/s, which is calculated as the indoor unit airflow divided by the nominal face area of the outlet. And the grill area shall not be deducted.
Minimum airflow rate must meet the corresponding values in Table 2.6, which is related to the actual refrigerant charge of the system (Mc).
The R-32 refrigerant leakage sensor is configured.

NOTE

The maximum refrigerant limit described above applies to unventilated areas. If adding additional measures, such as areas with mechanical ventilation or natural ventilation, The maximum refrigerant charge can be increased or the minimum room area can be reduced.
The R-32 refrigerant leakage sensor is configured for the indoor unit, meets the incorporated circulation airflow requirementsthe maximum refrigerant charge or minimum room area can be determined according to Table 2.4 or Table 2.5.

CAUTION

If the actual room area, air outlet height, and refrigerant charge amount are not reflected in the above table, more severe cases need to be considered according to the data in the Tables 2.3,2.4,2.5,2.6.

- Installation scheme flow chart

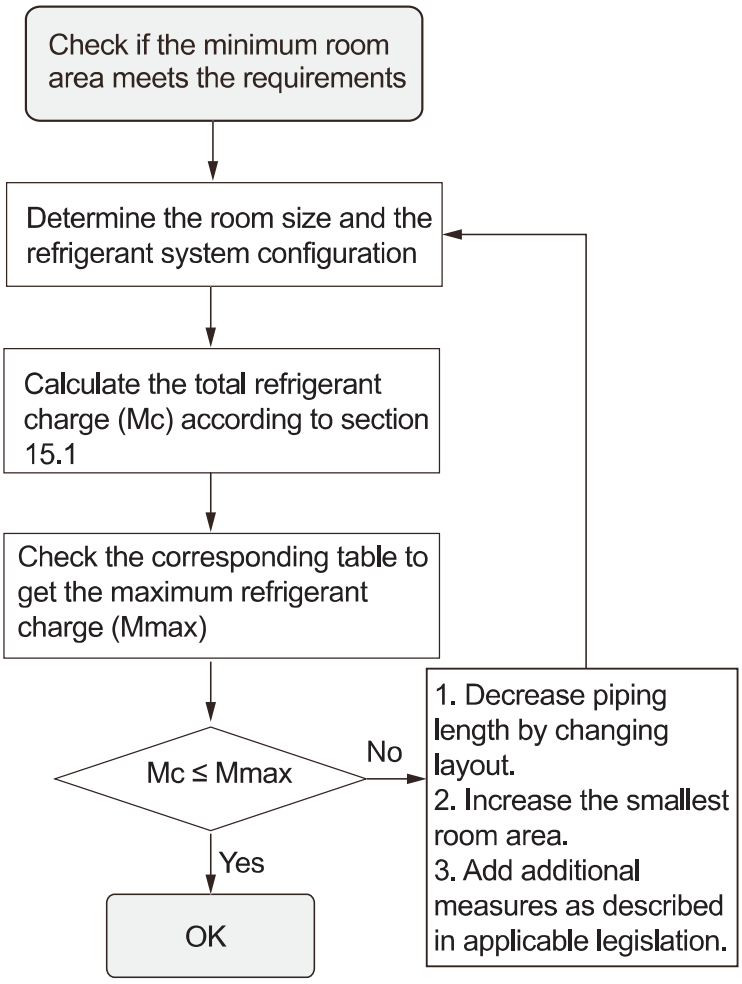

Figure 2.7

3. Unit Installation Preparation

3.1 Prepare the Unit for Installation

● Check whether there is any damage and report any damage to the unit to the manufacturer in time (Figure 3.1)

● The filler can be used to ensure that the refrigerant charge is maintained during shipment.

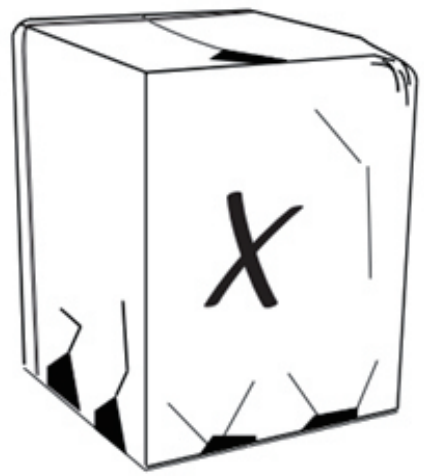

Figure 3.1

4. Unit Settings

4.1 Gasket Installation

When installing the unit on a support pad (such as a concrete slab), please consider the following:

● All sides of the pad must be at least 1-2 inches larger than the unit.

● The gasket must be separated from any structure.

● The mat must be level.

● The cushion must be high enough above the ground for drainage.

● The location of the pad must comply with national, state and local regulations.

These instructions are intended to provide a method of fixing the system to the cement slab as a fixing procedure in windy areas. Check the local regulations of tie-down methods and protocols.

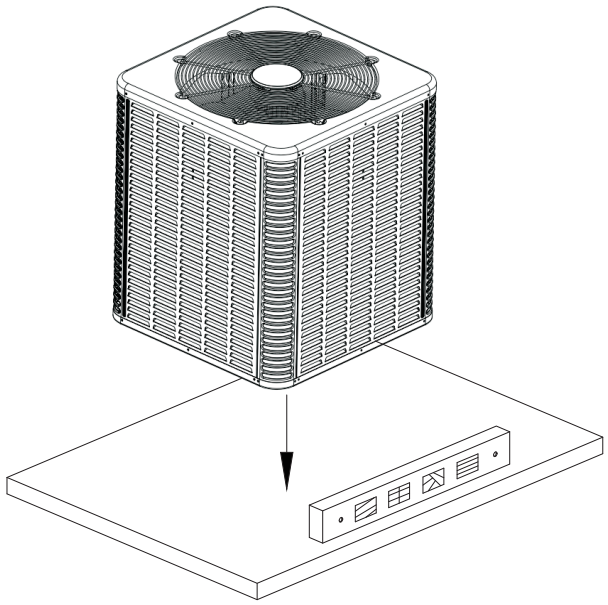

Figure 4.1

5. Precautions for Refrigerant Pipeline

5.1 Connecting Dimensions of Refrigerant Lines and Service Valves

Table 5.1

Model	Suction line	Liquid line	Suction line connection	Liquid line connection
	The dimensions are in inches.			
18K/24K/30K/36K/42K	3/4	3/8	3/4	3/8
48K/60K	7/8	3/8	7/8	3/8

5.2 Length of Required Refrigerant Pipeline

Determine the required pipeline length (Figure 5.1). Please refer to Section 2.2.

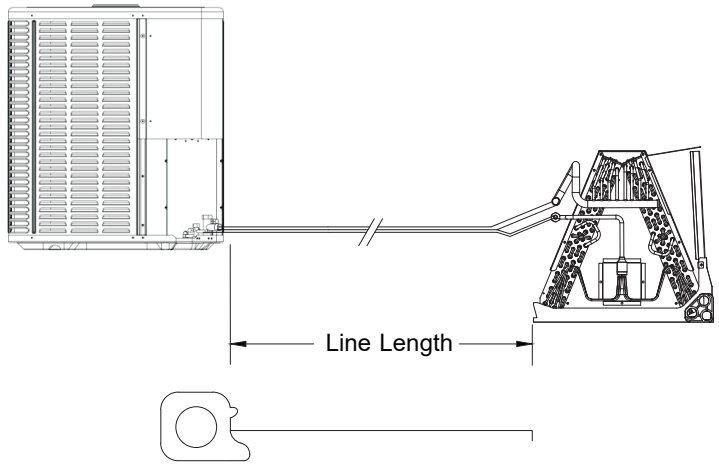

Figure 5.1

5.3 Refrigerant Pipe Insulation

The air pipe must always be insulated. Do not let the liquid pipeline and gas pipeline come into direct contact (metal to metal).

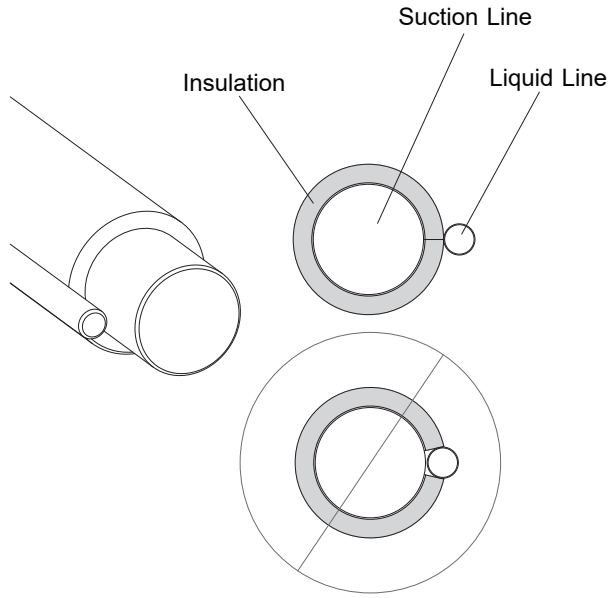

Figure 5.2

5.4 Reuse the Existing Refrigerant Lines

Note: Mild to moderate burns

- If using existing refrigerant lines, make sure that all joints are brazed, not soldered.

The following precautions should be taken for the retrofit application that will use the existing refrigerant pipeline:

- Make sure the refrigerant line size is correct. Refer to Section 2.2 and Table 2.2.
- Make sure the refrigerant line is free of leakage, acid and oil.

The manufacturer recommends that only approved matching indoor and outdoor systems be installed. All split systems are certificated by AHRI, the indoor unit is equipped with piston or TXV, and the model of piston and TXV is selected by manufacture, please do not change by yourself. The benefits of installing an approved indoor and outdoor split system are maximum efficiency, best performance and best overall system reliability.

6. Refrigerant Pipeline Routing

6.1 Preventive Measure

Take preventive measures to prevent noise generated by vibration transmission of refrigerant pipeline in building structure. For example:

- When the refrigerant pipeline must be fixed on floor joists or other frames in the structure, use isolated hangers.
- When the refrigerant pipeline runs in the column space or closed ceiling, the isolation hanger should also be used.
- When refrigerant lines pass through walls or windowsills, they should be insulated and isolated.
- Isolate the pipeline from all piping systems.
- Try to reduce the number of 90 º laps.

Comply with national, state and local regulations when isolating the wire group from joists, rafters, walls or other structural elements.

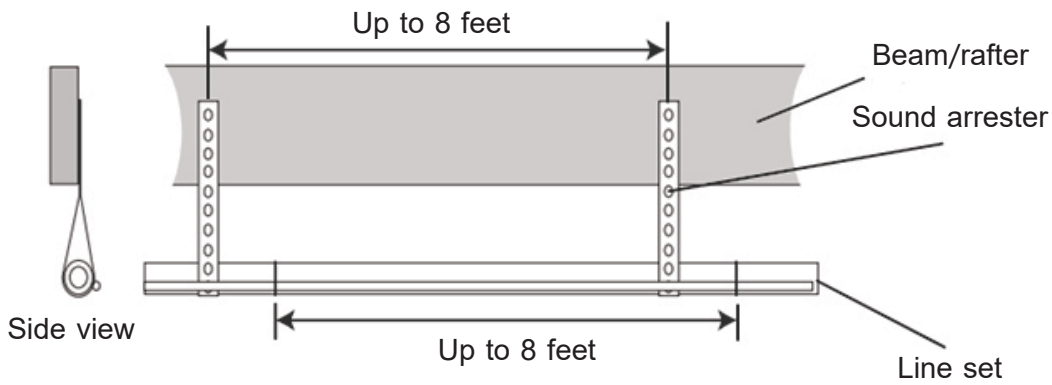

Use isolators to fix the air pipes on the beams every 8 feet. Every 8 feet, tape, wire or other suitable methods are used to fix the liquid line directly to the suction line.

Isolated from beam/rafter

Figure 6.1

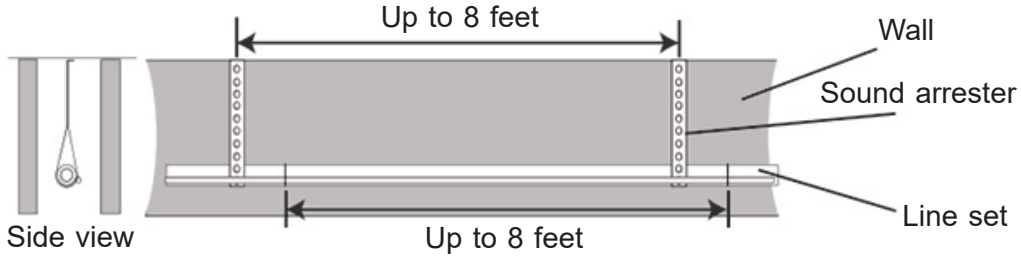

Use isolators to fix the suction line every 8 feet. Every 8 feet, liquid line directly to the suction line with tape, wire or other suitable methods.

Isolation on the wall

Figure 6.2

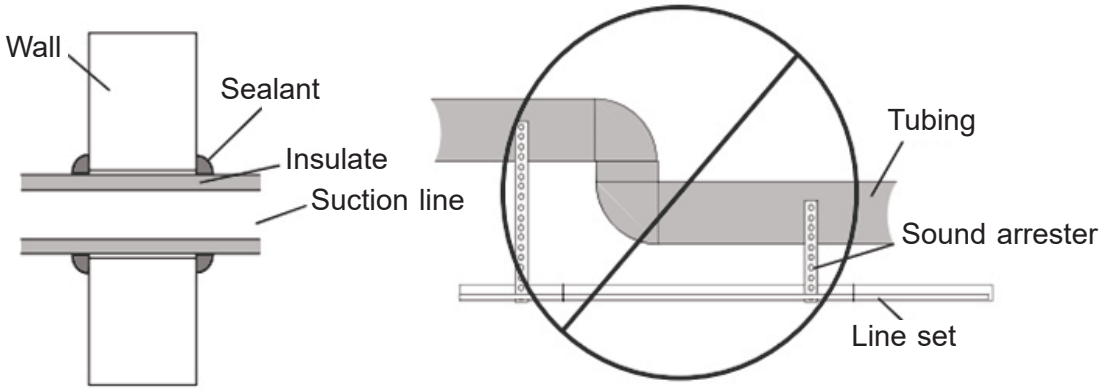

Wall isolation

Do not hang the pipeline on the duct work.

Figure 6.3

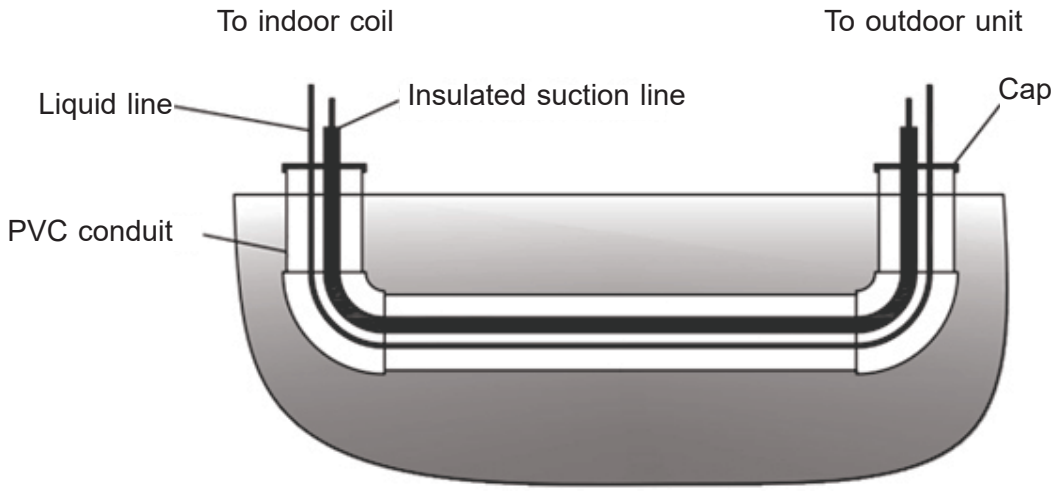

Figure 6.4

7. REFRIGERANT LINE CONNECTION

7.1 Connecting to Refrigerant Lines

WARNING:
Pipe work and installation shall be in compliance with national codes ASHRAE15.
The installation of pipe-work shall be kept to a minimum.
It is recommended to install a filter dryer,the filter drier should be installed in the liquid line between the outdoor unit's liquid line service valve and the indoor coil's metering device. The filter dryer should compatible with R-32 refrigerant.

- All joints made in the installation between parts of the refrigerating system, with at least one part charged, shall be made in accordance with the following:
  -A brazed, welded, or mechanical connection shall be made before opening the valves to permit refrigerant to flow between the refrigerating system parts. A vacuum valve shall be provided to evacuate the interconnecting pipe or any uncharged refrigerating system part.
  -Mechanical connectors used indoors shall comply with ISO 14903. When mechanical connectors are reused indoors, sealing parts shall be renewed. When flared joints are reused indoors, the flare part shall be refabricated.
  -Refrigerant tubing shall be protected or enclosed to avoid damage.
  -Flexible refrigerant connectors (such as connecting lines between the indoor and outdoor unit) that may be displaced during normal operation shall be protected against mechanical damage.
- Compliance is checked according to the installation instructions and a trial installation, if necessary.
- Field-made refrigerant joints indoors shall be tightness tested. The test method shall have a sensitivity of 5 grams per year of refrigerant or better under a pressure of at least 0.25 times the maximum allowable pressure. No leak shall be detected.
- For installations with field applied joints that are exposed in the occupied space,these joints shall be at least one of the following:
  -Mechanical joints in compliance with ISO 14903 or UL 207 (U.S. only).
  -Welded or brazed joints.
  -Joints in enclosures that vent to the unit or to the outside.
- Compliance is checked by inspection and tests.

8. Refrigerant Pipeline Brazing

8.1 Brazing Refrigerant Pipeline

1. Remove the cover or plug. Use the deburring tool to deburr the pipe end. Clean the inner and outer surfaces of the pipeline with emery cloth.

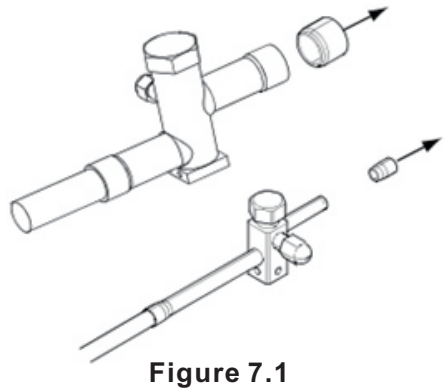

Figure 7.1

2. Remove the pressure taps from the two service valves.

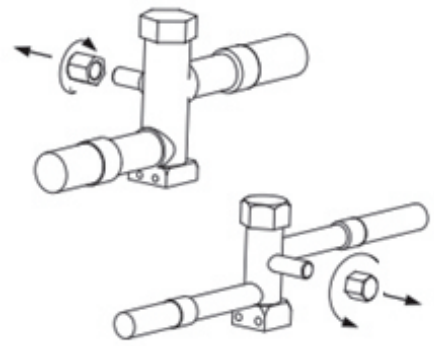

Figure 7.2

3. Purge refrigerant lines and indoor coils with dry nitrogen.

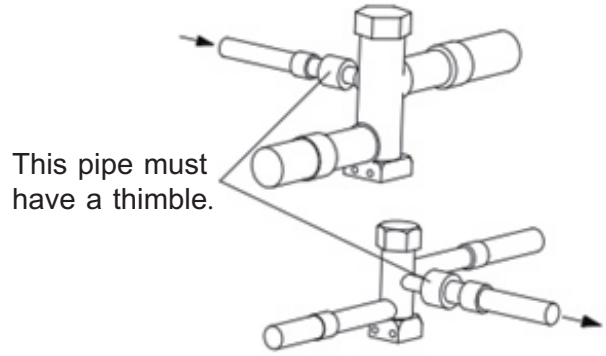

Figure 7.3

4. Wrap the valve body with a wet rag to avoid thermal damage, and continue the dry nitrogen purging (Figure 16).
   Braze the refrigerant line to the service valve.

Continue the dry nitrogen purge. Don't take off the wet rag before all brazing is completed.

Before stopping the dry nitrogen purge, please remove the wet rag.

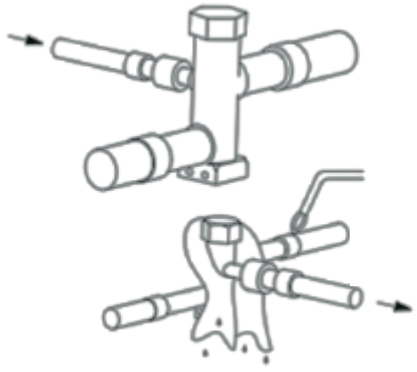

Figure 7.4

5. After the service valve cools down, replace the pressure tap.

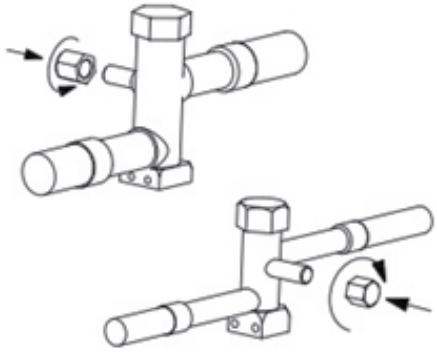

Figure 7.5

9. Refrigerant Pipeline Leakage Inspection

9.1 Check for Leaks

1. Use dry nitrogen to pressurize the refrigerant line and evaporator coil to 150 PSIG.

Figure 9 .1

2. Use soapy water or foam at each soldering position to check for leaks.

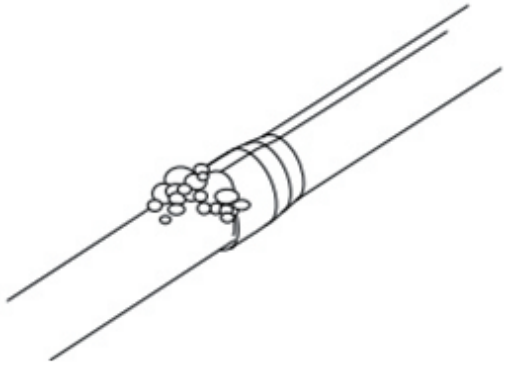

Figure 9 .2

WARNING:
After completion of field piping for split systems, the field pipework shall be pressure tested with an inert gas and then vacuum tested prior to refrigerant charging, according to the following requirements.
Entire line set and evaporator coil should hold 600 psig for 1 hour.
Field-made refrigerant joints indoors shall be tightness tested. The test method shall have a sensitivity of 5 grams per year of refrigerant or better under a pressure of at least 0,25 times the maximum allowable pressure. No leak shall be detected.

10. Emptying

10.1 Emptying Refrigerant Pipeline and Indoor Coil

Do not open the service valve until the leakage inspection and emptying of refrigerant lines and indoor coils are completed.

1. Evacuate until the micrometer reading is not higher than 350 micrometers, and then close the valve of the vacuum pump.

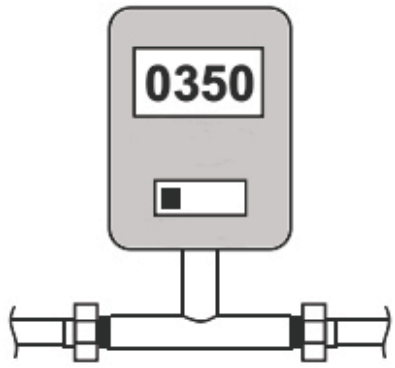

Figure 1 0 .1

2. Observe micrometer gauge. If the micrometer meter does not rise above 500 micrometers within one (1) minute, the evacuation is completed.

   After the evacuation, turn off the vacuum pump and micrometer, and close the valve on the manifold instrument cluster.

Figure 1 0 . 2

11. Service Valve

11.1 Open the Service Valve

Warning: Moderate to severe burns

- When opening the liquid side service valve, be extra careful.Turn counterclockwise until the valve stem just touches the hem. No torque is required. Failure to observe this warning will result in sudden release of system pressure, and may result in personal injury and/or proper ty damage.

Before opening the service valve, the leakage inspection and emptying must be complet ed. The valve of copper welded pipe installation should be used for leakage inspection and vacuum pumping. The use of a separate suction port in this process will lead to refrigerant loss.

Before opening the Liquid side service valve, the gas side service valve must be opened first.

1. Remove the valve cover (Figure 11.1).
2. Insert the hex wrench into the valve stem completely and back out counterclockwise until the valve stem just touches the bead .
3. Replace the valve stem cap to prevent leakage. Tighten it with your fingers and turn it for another 1/6 turn.
4. Repeat steps 1-3 for the liquid side service valve.

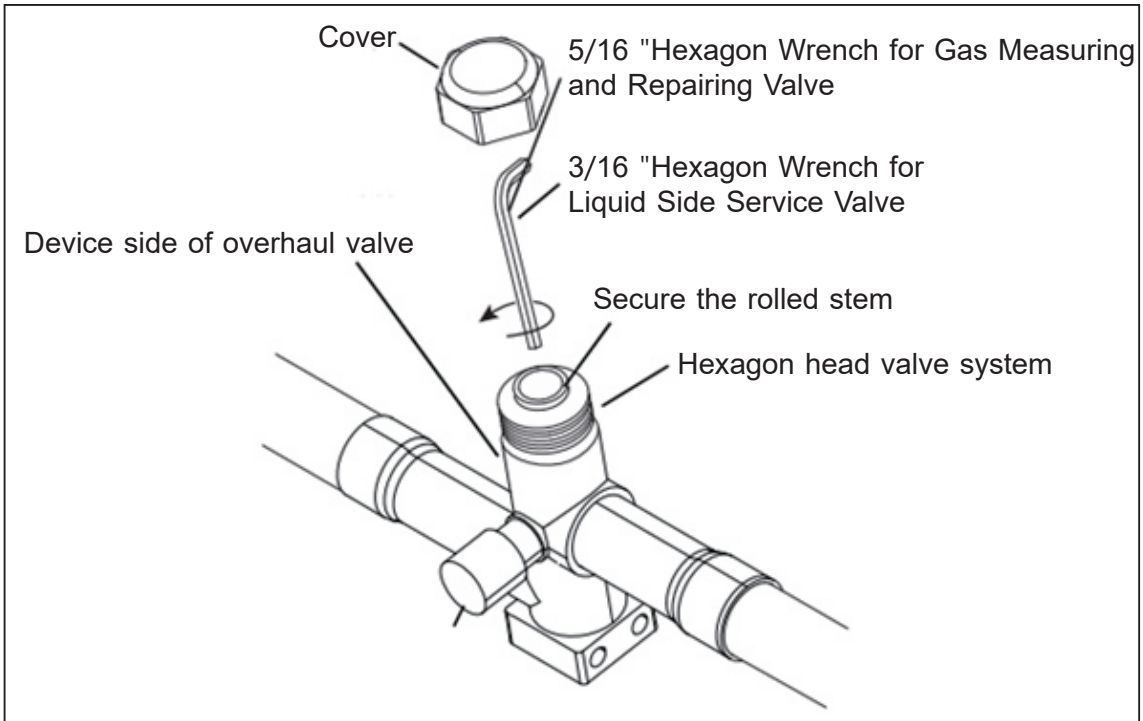

Figure 11.1

12. Electrical-Low Voltage

12.1 Low Voltage Connection Diagram

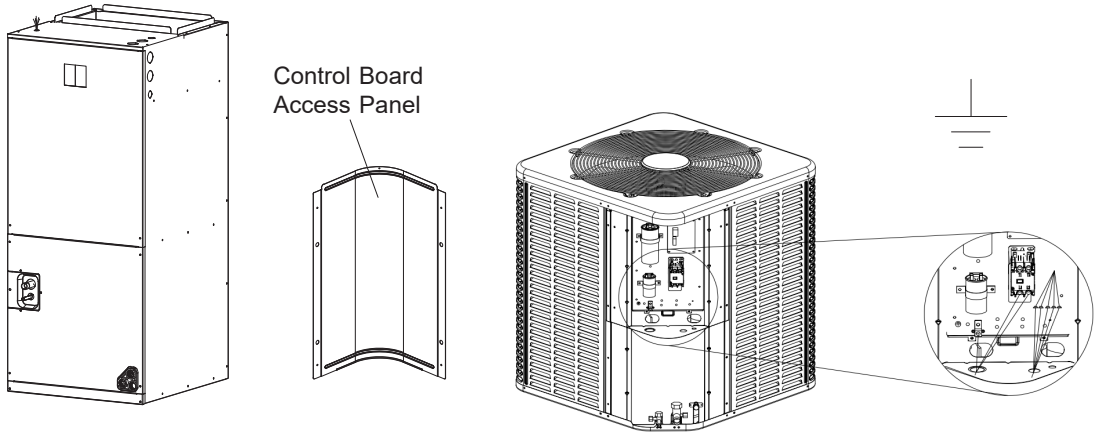

Figure 1 2 .1 Connection of Low Voltage Device

12.2 Wiring Diagram of Thermostat

- Ensure that the power supply is consistent with the nameplate of the unit.
- The power connection and grounding of the unit must comply with local regulations.
- Low-voltage wiring is the smallest conductor of NO. 22AWG.
- "-----"On-site installation of electrical auxiliary thermal connection
- Single-stage electric auxiliary heating supported by 2H thermostat
- Two-stage electric auxiliary heating supported by 3H thermostat
- W1: The first stage of electric auxiliary heating installed in the indoor unit.
- W2: The second stage of electric auxiliary heating installed in the indoor unit.
- The W signal of the outdoor unit is connected to the electric auxiliary heating or the first-stage electric auxiliary heat.

The dotted line in the following thermostat wiring diagram indicates optional wiring (electric heating). For the wiring of the thermostat, please refer to the user manual of the thermostat.

Terminal B will be connected with the thermostat (O/B) wiring. The reversing valve is energized during heating.

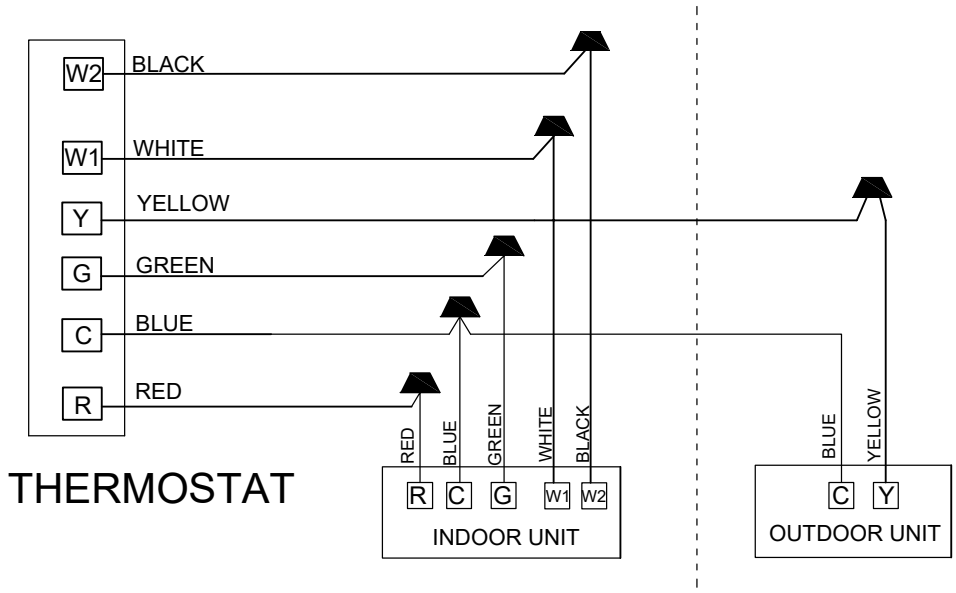

Figure 12.2 Wiring connection for A/C Systems

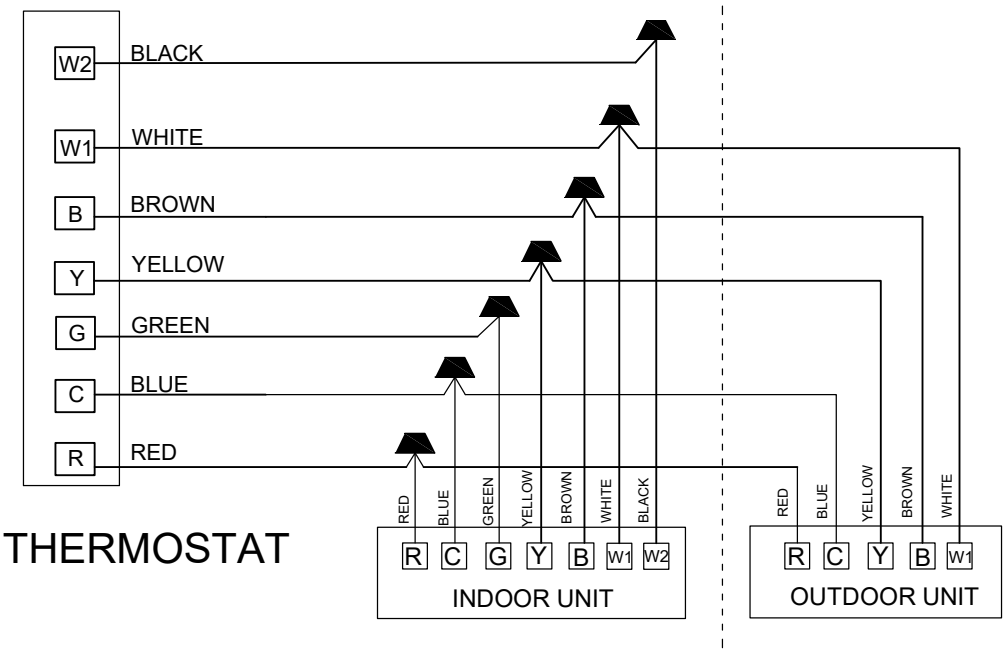

Figure 12.3 Wiring connection for H/P Systems

13. Electrical-High Voltage

13.1 High Voltage Power Supply

Warning: Live electrical parts!

- During the installation, testing, maintenance and troubleshooting of this product, it may be necessary to use live electrical parts. Failure to observe all electrical safety precautions when exposed to live electrical parts may result in death or serious injury.

The high-voltage power supply must match the nameplate of the unit (208/230V, 1PH, 60Hz).

Power supply wiring must comply with national, state and local regulations.

Follow the instructions of the unit wiring diagram located inside the access panel of the control box, and refer to the wiring diagram in this IOM.

13.2 High Voltage Isolating Switch

Install a separate disconnect switch on the outdoor unit.
High-voltage wiring must use flexible electrical conduit supplied on site.

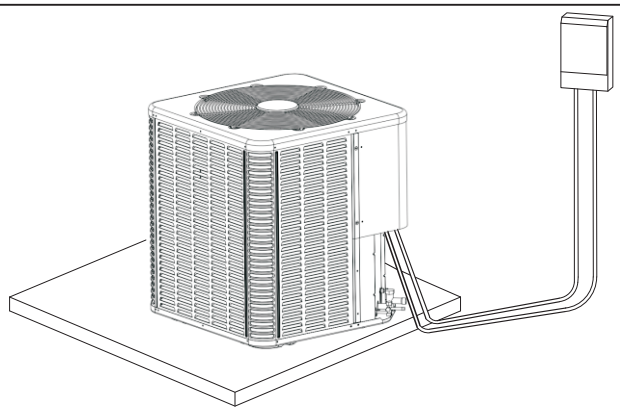

Figure 13.1

13.3 High Voltage Grounding

Ground the outdoor unit according to the requirements of national, state and local regulations.

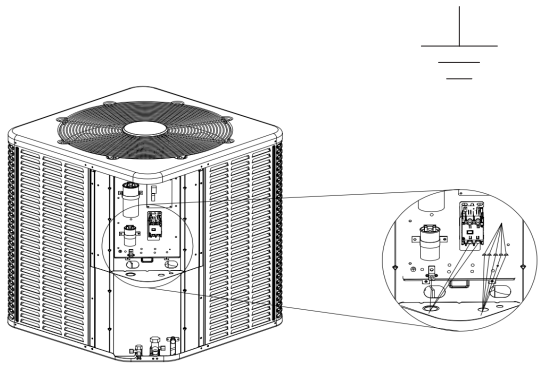

Figure 13.2

14. Start

14.1 System Startup

1. Make sure that parts 7, 8, 9, 10, 11 and 12 have been completed.
2. Set the system thermostat to off.

Figure 14.1

3. Turn on the disconnect switch and turn on the power of the indoor unit and outdoor unit.

Figure 14.2

4. Set the system thermostat to ON.

Figure 14.3

15. System Refrigerant Charging Regulation

15.1 Charging: Weighing Method

During the initial installation, or when the refrigerant quantity of the updated system is charged, the weighing method is used. When there is no power supply at the site of the unit or the operating conditions (indoor/outdoor temperature) are not within the range verified by Subcooling charging method. The charging coefficients for the lengths of refrigerant pipes of all models are shown in Table 15.1.

Table 15.1

Model		Tons						
		1.5	2	2.5	3	3.5	4	5
Amount of Additional Charge of Refrigerant	oz/ft	0.66	0.66	0.66	0.66	0.66	0.91	0.91

For a 25-ft standard size interconnecting liquid pipe, the factory refrigerant charge of the outdoor unit is sufficient.

New installation-Calculate the charging amount of connecting pipes larger than 25 ft.

1. Total length of pipeline (ft) = _____(a)
2. Standard piping setup (ft) =25 (b)
3. (a) minus (b) = _____ (c)
4. Refrigerant multiplier = _____ oz/ft (d)
5. Additional refrigerant quantity (c*d) = _____(e)*

* If the line set is less than 25 feet, e=0

Closed system maintenance-calculate the total filling amount of the system.

1. Total length of pipeline (ft) = _____(a)
2. Standard piping setup (ft) =25 (b)
3. (a) minus (b) = _____ (c)
4. Refrigerant multiplier = _____ oz/ft (d)
5. Additional refrigerant quantity (c*d)= _____(e) *
6. Factory filling quantity (nameplate)= _____(f)
7. Total system charge (e+f) = _____

* If the line set is less than 25 feet, e =0

Note: Regarding (d), for different models of machines, different refrigerant multiplier are selected in Table 15.1. For example, for a 1.5 ton machine, Refrigerant multiplier = 0.66 oz / ft.

The only mode approved for verifying system charging is in "forced cooling mode". The outdoor temperature must be between 55°F and 120°F and the indoor temperature should be between 70°F and 80°F.

15.2 Charging: Subcooling Charging in Cooling for TXV Match-Ups (above 55 ºF outdoor temp)

1. Check the outdoor ambient temperature.
   When the system matches up with TXV, subcooling charging (in cooling mode) is the only recommended method of charging above 55°F outdoor ambient temperatures.

It is important to return in the spring or summer to accurately charge the system in the cooling mode when outdoor ambient temperature is above 55 ºF.

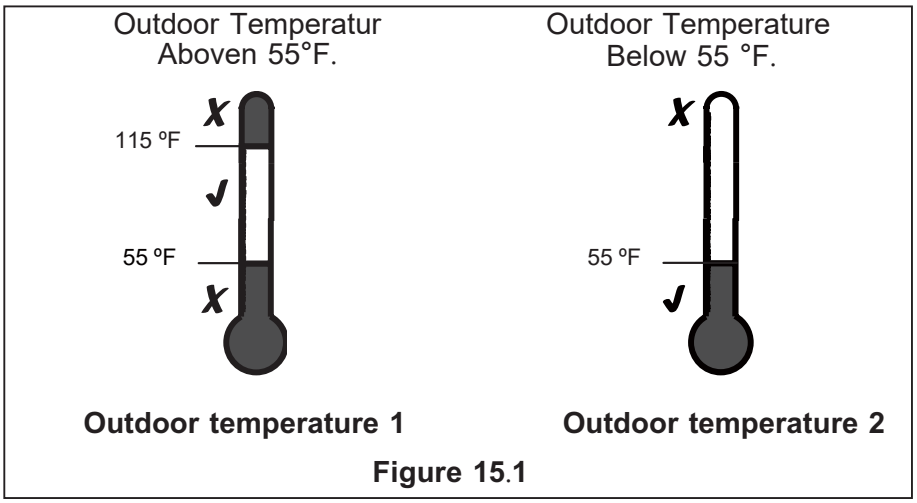

Figure 15.1

For best results, the indoor temperature should be kept between 70°F and 80°F during installation.

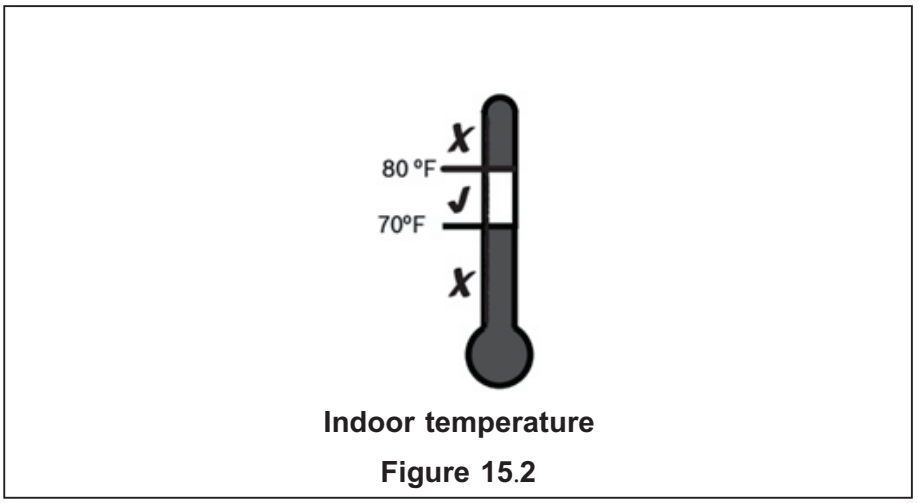

Figure 15.2

2. Ensure that all installation steps and trial runs have been completed.

3. Stabilize the system by operating for a minimum of 20 minutes.

At startup, or whenever charge is removed or added, the system must be operated for a minimum of 20 minutes to stabilize before accurate measurements can be made.

Figure 15.3

4. Determine the final subcooling value using the design subcool with TXV throttle table and charging chart corrections table below.

Design maximum subcool when using TXV throttle						
Outdoor DB(℉)	Indoor Unit Inlet DB/WB(℉)					
	95/79	90/75	85/71	80/67	75/63	70/58
115	7	8	10	11	12	13
110	6	7	10	11	12	13
105	4	5	10	10	11	12
100	4	5	8	9	10	12
95	4	4	5	8	9	11
90	4	4	5	7	8	10
85	4	4	5	5	7	9
80	4	4	5	5	6	11
75	4	4	4	4	4	12
70	4	4	5	5	7	13
65	4	4	5	5	9	13
60	4	4	5	5	7	12
55	4	4	4	4	4	10

Table 15.1

Design maximum subcool when using TXV throttle						
Outdoor DB(℉)	Indoor Unit Inlet DB/WB(℉)					
	95/79	90/75	85/71	80/67	75/63	70/58
115	9.5	10.5	12.5	13.5	14.5	15.5
110	8.5	9.5	12.5	13.5	14.5	15.5
105	6.5	7.5	12.5	12.5	13.5	14.5
100	6.5	7.5	10.5	11.5	12.5	14.5
95	6.5	6.5	7.5	10.5	11.5	13.5
90	6.5	6.5	7.5	9.5	10.5	12.5
85	6.5	6.5	7.5	7.5	9.5	11.5
80	6.5	6.5	7.5	7.5	8.5	13.5
75	6.5	6.5	6.5	6.5	6.5	14.5
70	6.5	6.5	7.5	7.5	9.5	15.5
65	6.5	6.5	7.5	7.5	11.5	15.5
60	6.5	6.5	7.5	7.5	9.5	14.5
55	6.5	6.5	6.5	6.5	6.5	12.5

Table 15.2

Determine total refrigerant line length, and height (lift) if indoor section is above the condenser. Use the Table15- 3 calculate any additional subcool required for your specific application.

SUBCOOL CHARGING TABLE CORRECTIONS FOR LINE LENGTH AND RISE

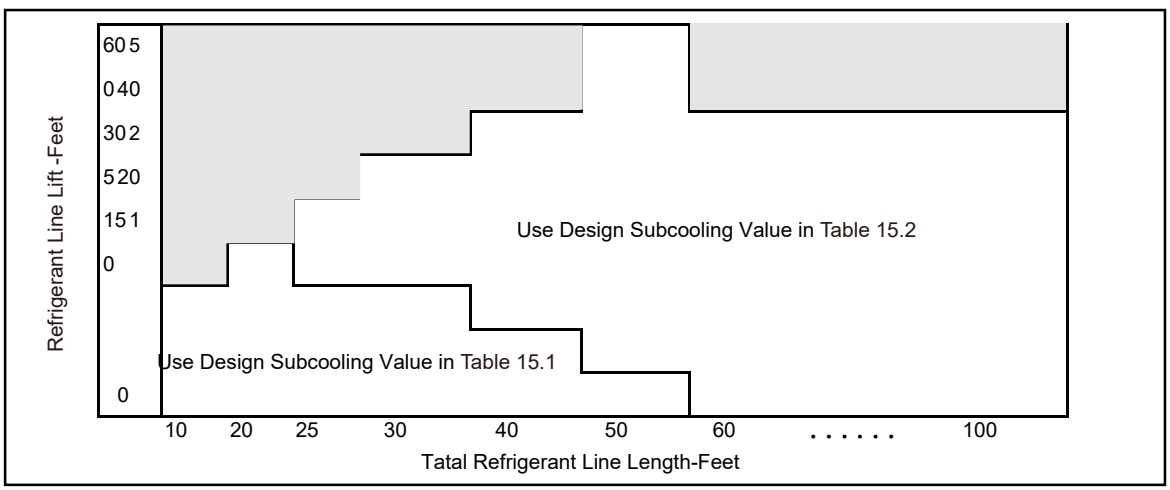

Table 15.3

Make sure the superheat is above 5 °F， and the maximum should not exceed 18 °F.

5. Use the final subcooling value, refrigerant temperature and pressure from STEP 4, to determine the proper subcooling using Table 15.4

Example: Assume a 8 ºF Final subcooling value and liquid temp of 85 ºF.

1) Locate 8 ºF final Subcooling in Table 15.4.

2) Locate the Liquid Temperature (85 ºF) in the left column.

3) The Liquid Gauge Pressure should be approximately 294 psig. (This is shown as the intersection of the Final Subcooling column and the Liquid Temperature row.

Design Subcooling Value = _____ºF

Measured liquid Line Temp. = _____ºF

Measured liquid Line Pressure = _____ psig

Final Subcooling Value = _____ ºF

Measured Suction Line Temp. = _____ºF

Measured Suction Line Pressure = _____ psig C

alculate superheating value = _____ºF

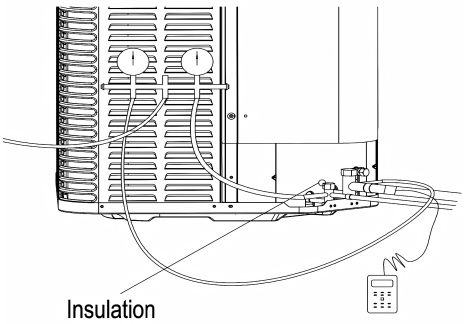

Figure 15.4

If calculated subcooling value is lower than the design subcooling value from step 4, please add refrigerant. Repeat steps 3 through 6.

LiquidTemp (°F)	Final Subcooling(°F)				
	4.0	6.0	8.0	10.0	12.0
	Liquid Gauge Pressure(psig)				
55	171.0	177.0	183.0	189.0	196.0
60	186.0	193.0	199.0	206.0	213.0
65	202.0	209.0	216.0	223.0	230.0
70	220.0	227.0	234.0	241.0	249.0
75	238.0	245.0	253.0	261.0	269.0
80	257.0	265.0	273.0	281.0	290.0
85	277.0	286.0	294.0	303.0	312.0
90	299.0	307.0	316.0	326.0	335.0
95	321.0	330.0	340.0	350.0	360.0
100	345.0	355.0	365.0	375.0	385.0
105	370.0	380.0	391.0	401.0	412.0
110	396.0	407.0	418.0	429.0	441.0
115	424.0	435.0	447.0	459.0	471.0
120	453.0	465.0	477.0	489.0	502.0
125	483.0	496.0	509.0	522.0	535.0

LiquidTemp (°F)	Final Subcooling(°F)				
	14.0	16.0	18.0	20.0	22.0
	Liquid Gauge Pressure(psig)				
55	202.0	209.0	216.0	223.0	230.0
60	220.0	227.0	234.0	241.0	249.0
65	238.0	245.0	253.0	261.0	269.0
70	257.0	265.0	273.0	281.0	290.0
75	277.0	286.0	294.0	303.0	312.0
80	299.0	307.0	316.0	326.0	335.0
85	321.0	330.0	340.0	350.0	360.0
90	345.0	355.0	365.0	375.0	385.0
95	370.0	380.0	391.0	401.0	412.0
100	396.0	407.0	418.0	429.0	441.0
105	424.0	435.0	447.0	459.0	471.0
110	453.0	465.0	477.0	489.0	5020
115	483.0	496.0	509.0	522.0	535.0
120	515.0	528.0	542.0	556.0	570.0
125	549.0	563.0	577.0	591.0	606.0

Table 15.4

6. Adjust refrigerant level to attain proper gauge pressure.

Add refrigerant if the subcooling reading from Table 1 5 . 4 is lower than the designed value from step 4.

- Connect gauges to refrigerant bottle and unit as illustrated (Fig. 15.5).
- Purge all hoses.
- Open tank.
- Stop adding refrigerant when subcooling matches the design value from step 4.

Recover refrigerant if the subcooling reading from Table 1 5 . 4 is higher than the design value from step 4.

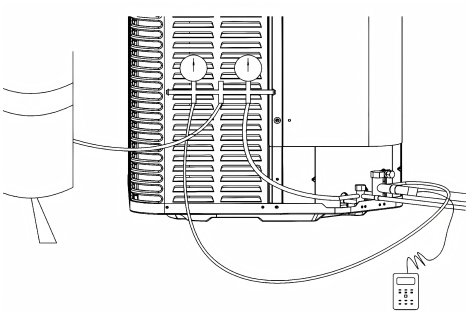

Figure 15.5

7. Stabilize the system.

- Wait 5 minutes for the system condition to stabilize between adjustments.

When the subcooling matches the design value from step 4, the system is properly charged.

- Remove gauges.
- Replace service port caps to prevent leaks. Tighten finger tight plus an additional 1/6 turn.

8 . Record System Information for reference (Table 15.5).Record system pressures and temperatures after charging is complete.

Description	Value
Outdoor model number	
Measured Outdoor Ambient	°F
Measured Indoor Ambient	°F
Measured Liquid Line Temp	°F
Measured Suction Line Temp	°F
Liquid Gauge Pressure	psig
Suction Gauge Pressure	psig

Table 15.5

16. System Operation and Troubleshooting

16.1 Control Logic Description

- The system is using universal 24V control.

16.2 Sensors

- T3- Outdoor unit coil temperature(Figure 16.3)
- T4- Ambient temperature(Figure 16.4)
- T5- Compressor exhaust temperature(Figure 16.5)
- HP- High pressure switch
- LP- Low pressure switch

16.3 Description of Defrosting

- Outdoor unit W terminal will output 24V signal during defrost mode.
- Unit will run defrost mode in below condition:
  1) Unit run in heating mode
  2) Compressor is running.
  3) The defrost mode and cycle time is relate with SW1-2 and SW1-3 dial switch

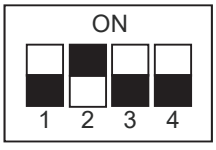

SW1

Figure 16.1

Table 16.1

Dial switch	SW1-2	SW1-3
OFF	Defrost mode 2	Cycle time: 60 min
ON	Defrost mode 1	Cycle time: 30 min

① When SW1-2 is ON, unit will run defrost mode 1 when it meets any below conditions:
Condition 1: When compressor start, unit will record minimum T3 which named T30, and minimum T4 which named T40 during compress start 10-15mins.
When outdoor unit meets below condition, unit will run defrost mode:
a) When T3<0, and compressor run for 40mins;
b) Unit calculate ΔT4=T4-T40(If ΔT4≤2, unit will resultΔT4=0), and T3 + 2 < (T30+ΔT4) keep 30s.
Condition 2: When T3<0, and compressor run for 40mins, and T3<-20℃, unit will defrost.

② When SW1-2 is OFF, unit will run defrost mode 1 when it meets any below conditions:
Condition 1:
a) SW1-3 is ON, and compressor is running, when T3<-1℃ and keep 30 mins, unit will run defrost.
b) SW1-3 is OFF, and compressor is running, when T3<-1℃ and keep 60 mins, unit will run defrost.
Condition 2: When unit power on, and compressor first time start, and T3<-2℃, unit will run defrost.
Condition 3: Condition 2: When unit standby for 2 hours, and T3<-2℃, unit will run defrost.

4) Quit defrost condition:

① When SW1-2 is ON, unit will quit defrost when it meets any below condition.
Condition 1: Defrost time is last 10 mins.
Condition 2: T3≥ 15℃

② When SW1-2 is OFF, unit will quit defrost when it meets any below condition.
Condition 1: Defrost time is last 10 mins.
Condition 2: T4≥-2℃and T3≥25℃
Condition 3: Compressor stop
Condition 4: T4＜-2℃ ,T3≥25℃and keep 60s.

16.4 Compressor Crankshaft Heater Control Function

The crankshaft heater logic is below:

① Crankshaft heater ON condition:
When unit meet any below condition, crankshaft heater will ON:
Condition 1: Meet 3 conditions at same time below:
a) T5<23℃ or T5 sensor is abnormal.
b) Outdoor unit is in standby mode, and T4 was lower 10℃ before.
c) Outdoor unit stop time ≥4h.
Condition 2:
a) Outdoor unit power on, and T5<23℃;
b) Outdoor unit is in defrost mode, and T5<23℃。

② Crankshaft heater OFF condition
T5≥28℃ and no T5 error

16.5 Four-way valve operate condition

Four-way valve will power on in heating mode, and power off in cooling mode.

16.6 LED display function of the outdoor unit main PCB and fault table

Table 16.2

Display content		State description
No alarm: Green light flashes Red light off	Green light slow fashes	Normal standby
	Green light normally on	Normal operation
System alarm: Red light on Green light flashes	High pressure alarm	Green light flashes 1 times every 8 seconds
	(T3)Temperature sensor fault	Green light flashes 2 times every 8 seconds
	Outdoor low-temperature protection function(CUT-OUT/CUT-IN)	Green light flashes 3 times every 8 seconds
	High exhaust temperature peotection	Green light flashes 5 times every 8 seconds
	Low pressure alarm	Green light flashes 6 times every 8 seconds(If the compressor is turned on, then there will be a 60-second delay.)
	Fan feedback fault	Green light flashes 7 times every 8 seconds (Applied to DC fans)
	(T5)Temperature sensor fault	Green light flashes 8 times every 8 seconds
	(T4)Temperature sensor fault	Green light flashes 9 times every 8 seconds
	(T3)High temperature protevtion	Green light flashes 10 times every 8 seconds
System has locked up: Green light off Red light flashes	Three high/low pressure alarm within 20 minutes	The machine can only operate when it is powered on again.
	Three instances of excessively high exhaust temperature within 20 minutes	
	Three instances of T3 high-temperature protection within 20 minutes (HP only)	

16.7 Troubleshooting of Fault Codes

Warning: Dangerous voltage

● When measuring the resistance, make sure that the power of the unit is turned off and wait for 3 minutes before measuring.

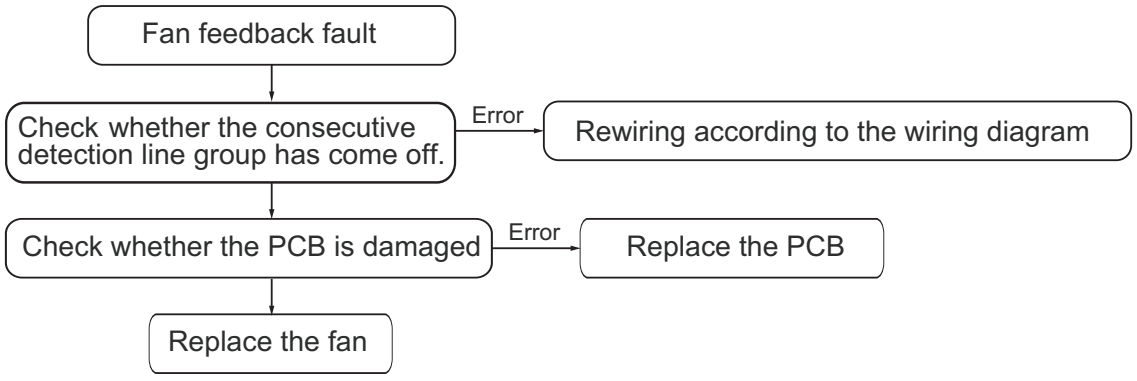

Figure 16.2 Fan feedback fault

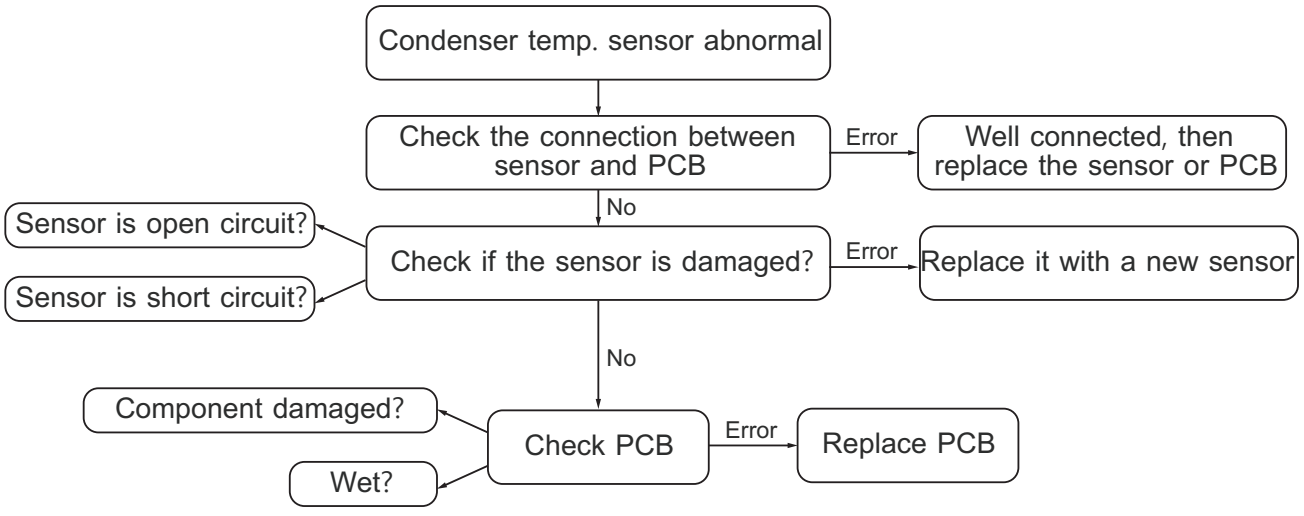

Figure 16.3 T3 Condenser Temperature sensor error

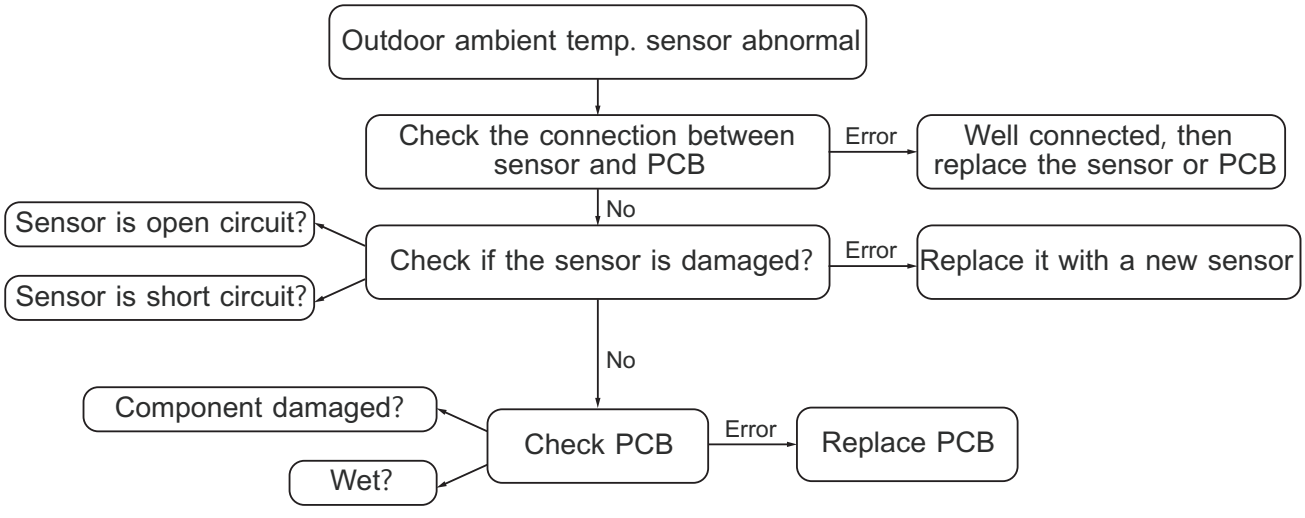

Figure 16.4 T4 Outdoor Ambient Temperature sensor error

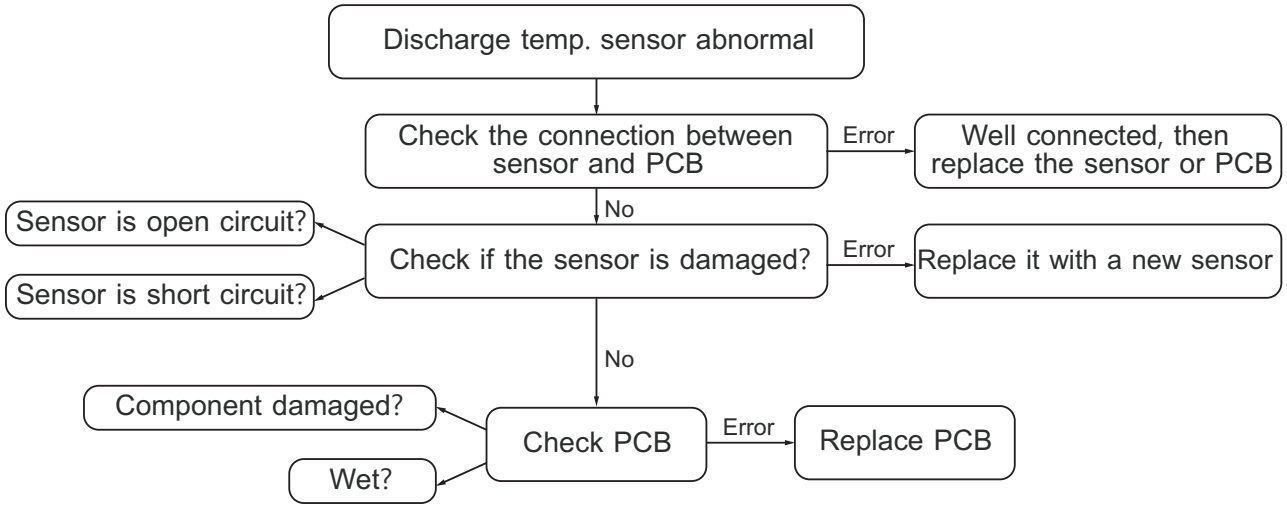

Figure 16.5 T5 Discharge Temperature sensor error

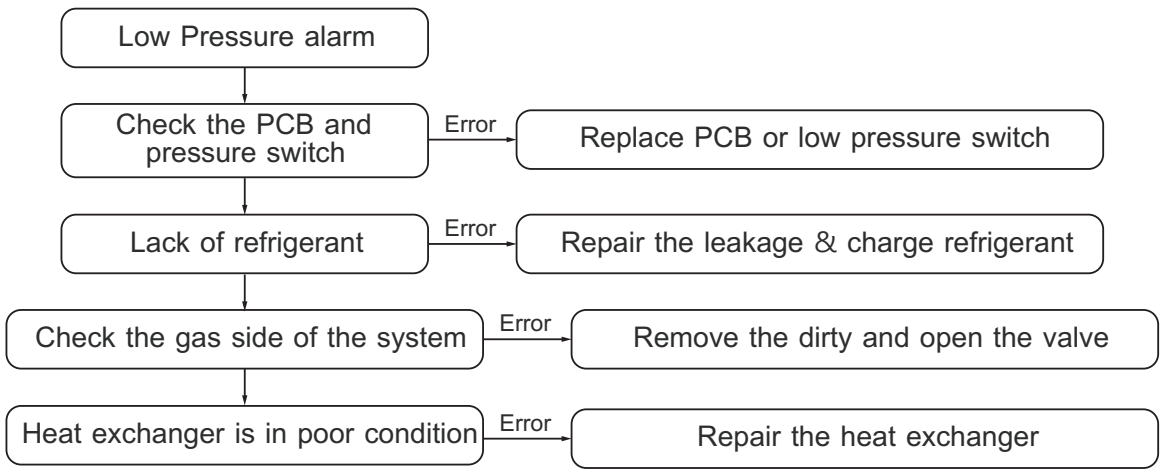

Figure 16.6 Low Pressure alarm

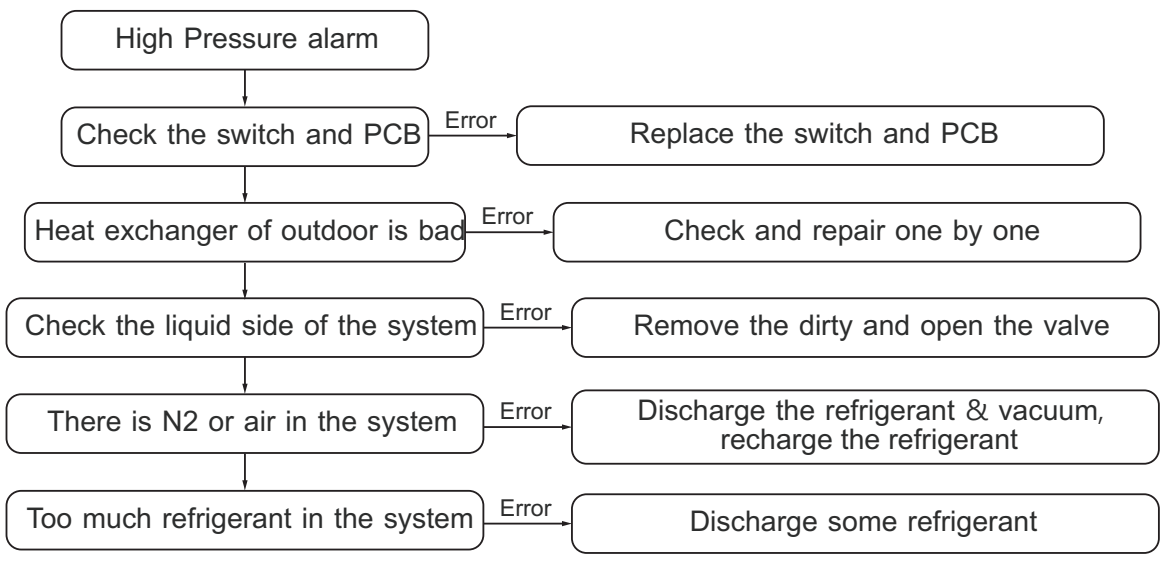

Figure 16.7 High Pressure alarm

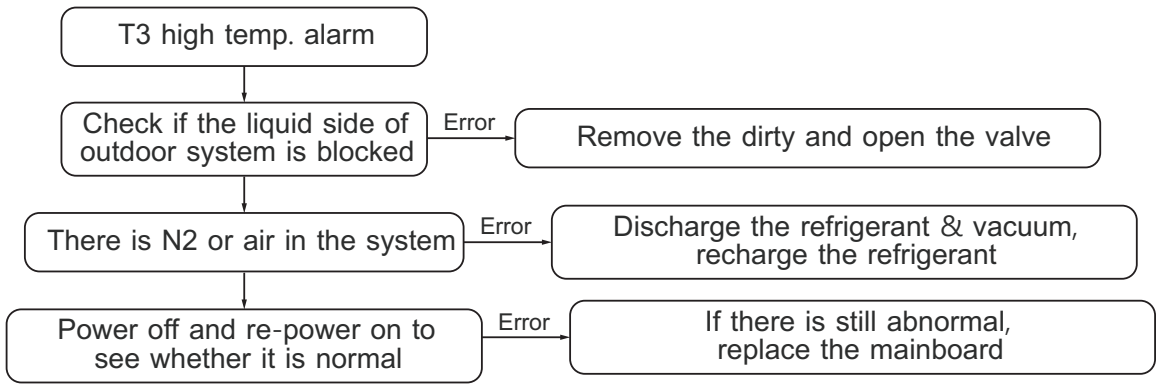

Figure 16.8 T3 high temperature alarm

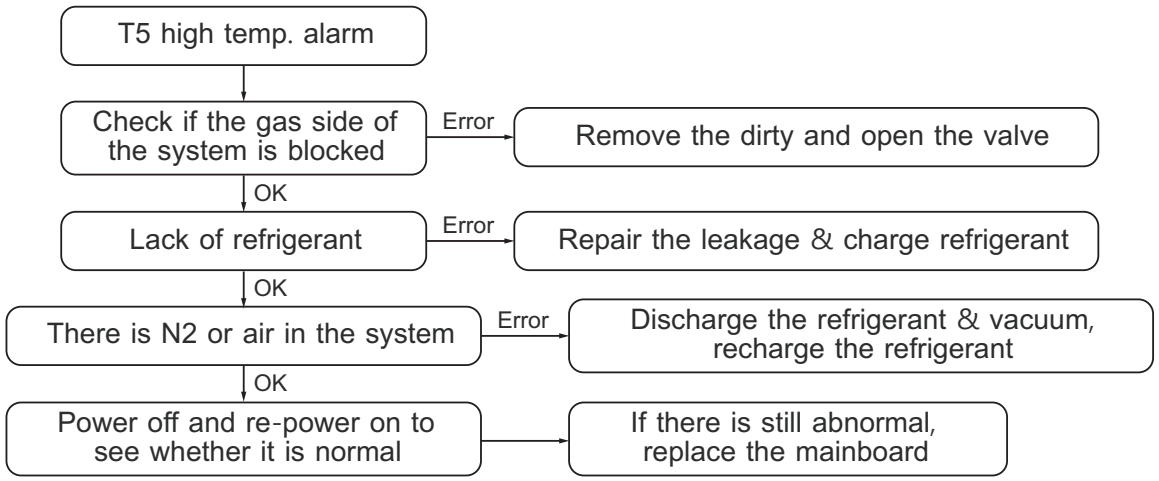

Figure 16.9 T5 high temperature alarm

16.8 Operation Limits

Mode \ Temperature	Cooling operation	Heating operation
Room temperature	63°F～86°F	63°F～86°F
Outdoor temperature	59°F～120°F	5°F～90°F

NOTICE:Ton=5°F,Toff=2°F

17.Wiring Diagram

Applicable for 18K,24K,30K,36K,42K,48K,60K cooling only type

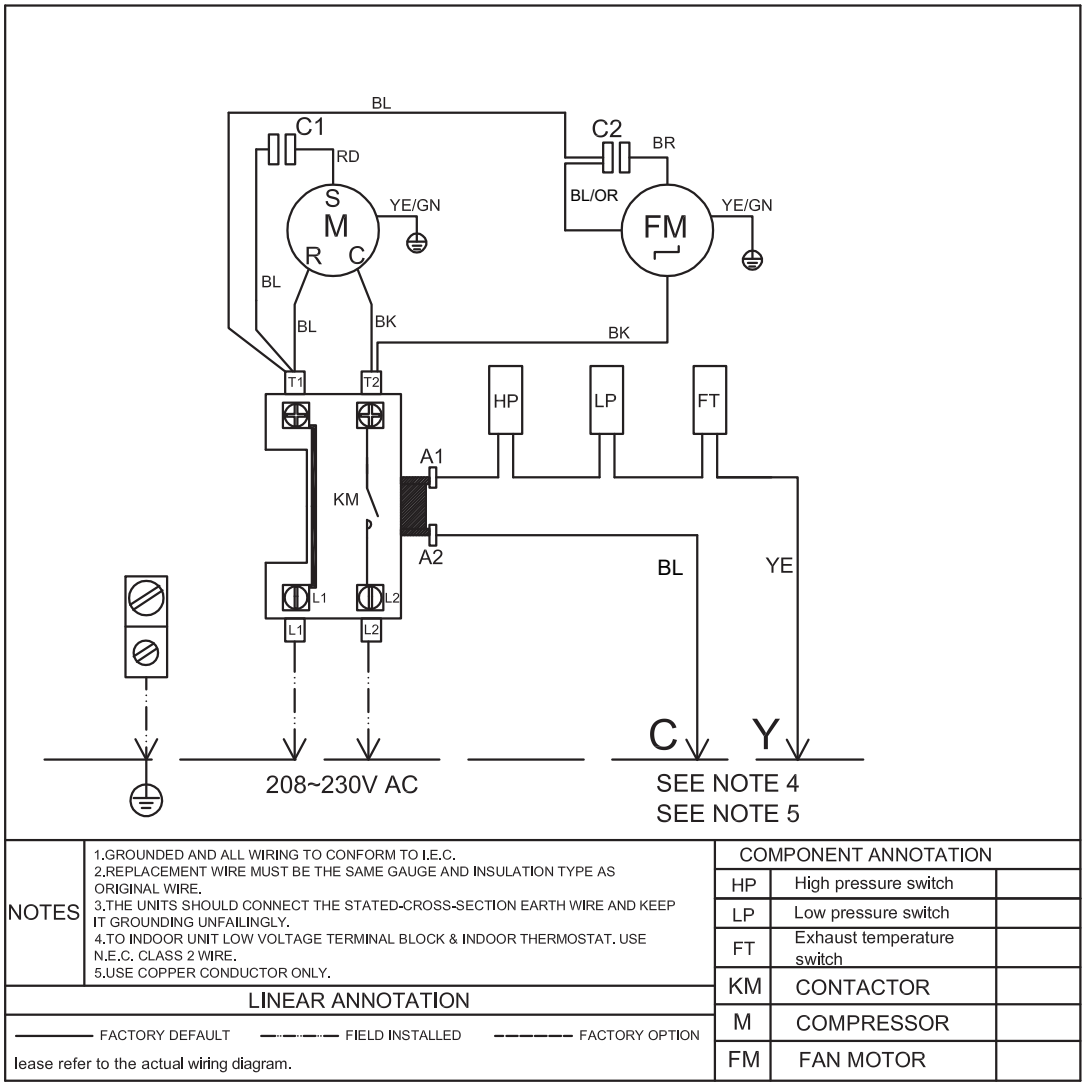

NOTE:For reference only, the actual wiring diagram shall prevail

Figure 17.1 Wiring Diagram for AC Systems

Applicable for 18K,24K,36K,42K,48K,60K cooling & heating type

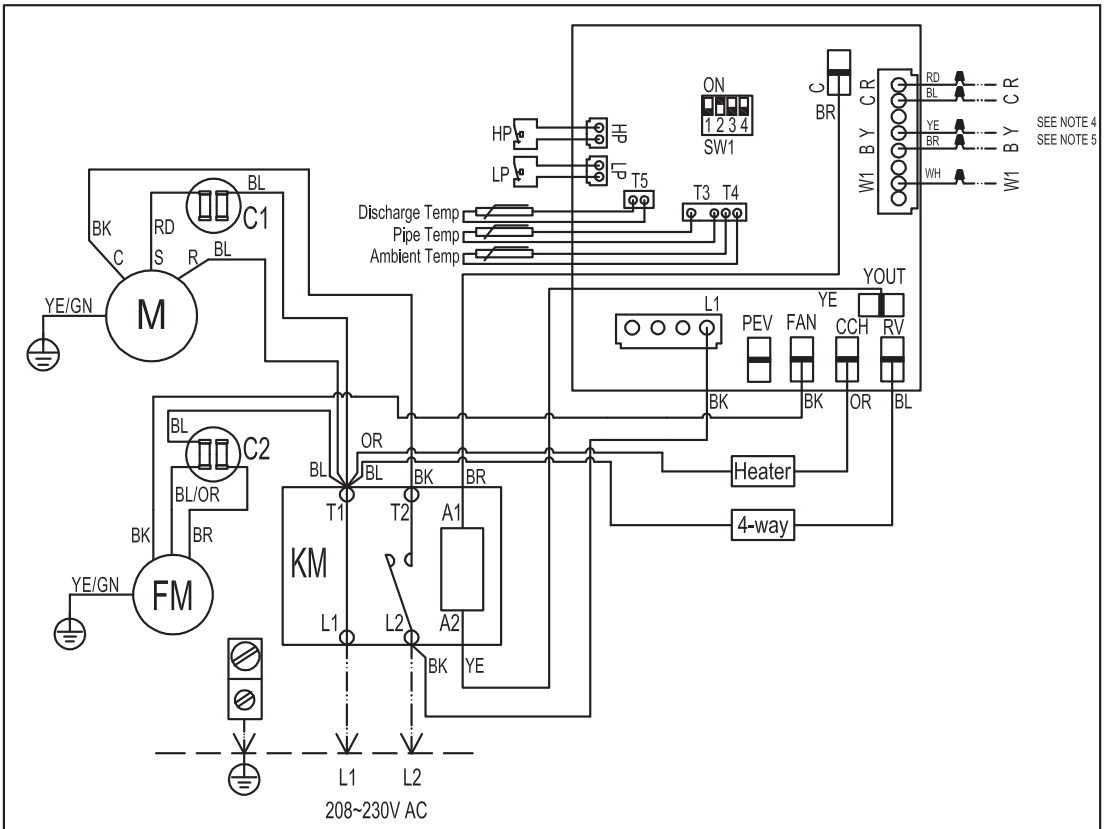

LINEAR ANNOTATION	COMPONENT ANNOTATION	DIAL SWITCH DESCRIPTION			FACTORY SETTING
FACTORY DEFAULT FIELD INSTALLED FACTORY OPTION Please refer to the actual wiring diagram	KM CONTACTOR M COMPRESSOR FM FAN MOTOR HEATER CRANKSHAFT HEATING BAND HP High pressure switch LP Low pressure switch	SW1-1	ON	MANUAL DEFROST	
			OFF	AUTOMATIC DEFROST	√
		SW1-2	ON	DEFROST MODE 1	√
			OFF	DEFROST MODE 2	
		SW1-3	ON	DEFROST CYCLE:30MIN	
			OFF	DEFROST CYCLE:60MIN	√
		SW1-4	ON	PHASE SEQUENCE TEST ON	
			OFF	PHASE SEQUENCE TEST OFF	√

NOTES
1.GROUNDED AND ALL WIRING TO CONFORM TO I.E.C.
2.REPLACEMENT WIRE MUST BE THE SAME GAUGE AND INSULATION TYPE AS ORIGINAL WIRE.
3.THE UNITS SHOULD CONNECT THE STATED-CROSS-SECTION EARTH WIRE AND KEEP IT GROUNDING UNFAILINGLY.
4.TO INDOOR UNIT LOW VOLTAGE TERMINAL BLOCK & INDOOR THERMOSTAT. USE N.E.C. CLASS 2 WIRE.
5.USE COPPER CONDUCTOR ONLY.

NOTE: For reference only, the actual wiring diagram shall prevail

Figure 17.2 Wiring Diagram for HP Systems

Applicable for 30K cooling & heating type

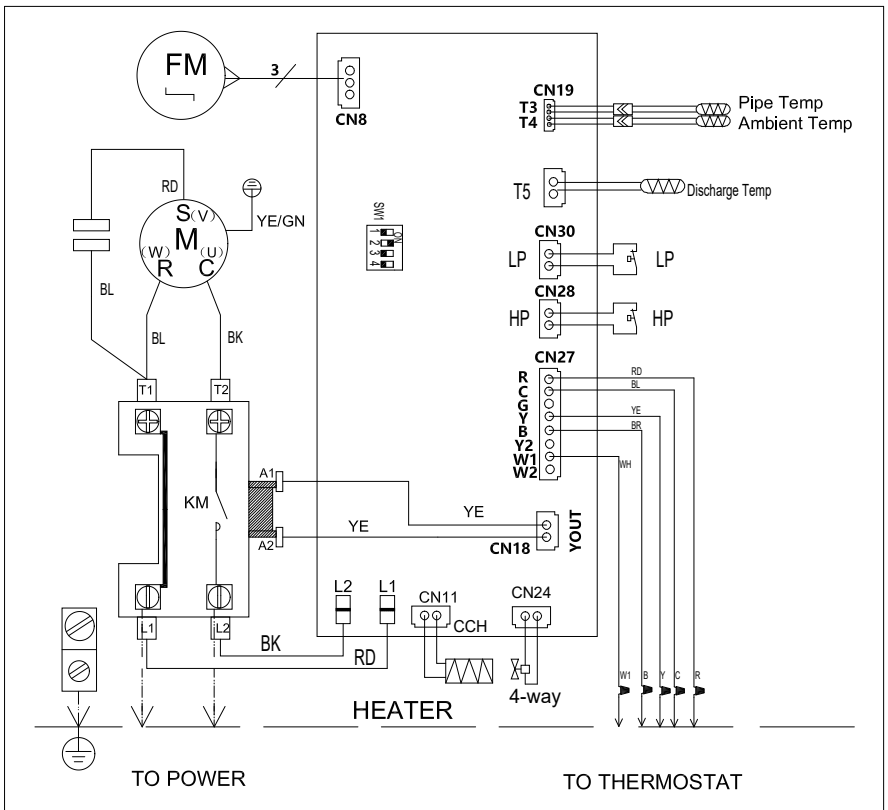

LINEAR ANNOTATION	COMPONENT ANNOTATION	DIAL SWITCH DESCRIPTION			FACTORY SETTING
——— FACTORY DEFAULT	KM CONTACTOR	SW1-1	ON	MANUAL DEFROST	
—·—·— FIELD INSTALLED	M COMPRESSOR		OFF	AUTOMATIC DEFROST	√
— — — FACTORY OPTION	FM FAN MOTOR	SW1-2	ON	DEFROST MODE 1	√
Please refer to the actual wiring diagram	HEATER CRANKSHAFT HEATING BAND		OFF	DEFROST MODE 2	
NOTES	1.Grounded and all wiring to conform to I.E.C.	SW1-3	ON	DEFROST CYCLE:30MIN	
	2.Replacement wire must be the same gauge and insulation type as original wire.		OFF	DEFROST CYCLE:60MIN	√
	3.The units should connect the stated-cross-section earth wire and keep it grounding unfailingly.	SW1-4	ON	PHASE SEQUENCE TEST ON	
			OFF	PHASE SEQUENCE TEST OFF	√

NOTE: For reference only, the actual wiring diagram shall prevail

Figure 17.3 Wiring Diagram for HP Systems

18.Cleaning and Maintenance

18.1 Cleaning Precautions

Warning:

- Any maintenance and cleaning of outdoor units can only be carried out by qualified maintenance personnel.
- Any unit maintenance can only be carried out by qualified maintenance personnel.

Caution: Electric shock

- Be sure to turn off the unit and disconnect the power supply before cleaning or maintenance.

Note:

- Do not use chemicals or chemically treated cloth to clean the unit.
- Do not use benzene, paint thinner, polishing powder or other solvents to clean this unit.

Be careful:

- When removing the filter, do not touch the metal parts in the unit. Sharp metal edges can cut you.

18.2 Pre-Season Inspection and Maintenance

At the start of each heating or cooling season, do the following:

	Turn off the unit and disconnect the power supply.
	Check for damaged wires, check for leaks.
	Make sure that all air inlets and outlets are not blocked.

Table 18.1

Design, material, performance specifications and components subject to change without notice.